Working Draft American National Standard

Project T10/1826-D

Revision 05
22 June 2008

Information technology - SCSI / ATA Translation - 2 (SAT-2)

This is an internal working document of T10, an International Technical Committee of Accredited Standards Committee INCITS (International Committee for Information Technology Standards). As such this is not a completed standard and has not been approved. The contents may be modified by the T10 Technical Committee. The contents are actively being modified by T10. This document is made available for review and comment only.

T10 Technical Editor:

Mark A. Overby
NVIDIA Corporation
12131 131st Ave NE, Suite 203
Kirkland, WA
98034
USA

Telephone: 425-417-9412
Email: moverby@nvidia.com

Reference number
ISO/IEC XXXXX-XXX : 200x
ANSI BSR INCITS ***-2006

Printed Monday, August 04, 2008 2:33 PM

Summary of Comments on SCSI / ATA Translation Standard

Page: 1

Number: 1 Author: LSI-Besmer Subject: Note Date: 8/26/2008 8:02:35 PM -07'00'

Should all SBC-2 be SBC-3 instead?

Status
moverby Accepted 11/3/2008 11:11:58 PM

Number: 2 Author: HPQ-RElliott Subject: Highlight Date: 9/3/2008 9:42:24 AM -07'00'

Revision 05
s/b
Revision 06

Status
moverby Accepted 9/11/2008 11:15:50 AM -07'00'

Number: 3 Author: Kevin_Marks Subject: Highlight Date: 8/7/2008 10:56:03 AM -07'00'

Revision 05

s/b

Revision 06

Status
moverby Accepted 9/11/2008 11:15:46 AM -07'00'

Number: 4 Author: moverby Subject: Replacement Text Date: 9/8/2008 4:39:02 PM -07'00'

Revision 6

Status
moverby Accepted 9/11/2008 11:15:55 AM -07'00'

Number: 5 Author: HPQ-RElliott Subject: Highlight Date: 9/3/2008 9:42:24 AM -07'00'

22 June 2008

is incorrect

Status
moverby Accepted 9/11/2008 11:15:59 AM -07'00'

Number: 6 Author: ENDL Texas Subject: Note Date: 8/27/2008 10:52:56 AM -07'00'

Global
Wherever possible the latest versions of standards should be referenced (e.g., SBC-2 s/b SBC-3, SPC-3 s/b SPC-4). This appears to have already been done for SAM-4.

Status
moverby Accepted 11/3/2008 11:12:01 PM

Number: 7 Author: Kevin_Marks Subject: Sticky Note Date: 8/8/2008 8:40:57 AM -07'00'

Global - We've got references all over the place. We have references to SAM-3,SAM-4, SBC-2, SBC-3, SPC-3 and SPC-4, SAS-1.1, SAS-2. Very confusing.

Suggest using latest:
SAM-4 - thru LB
SPC-4 is stable
SBC-3 going to LB soon
SAS-2 in LB resolution

Status
moverby Accepted 11/3/2008 11:12:05 PM

Points of Contact:

International Committee for Information Technology Standards (INCITS) T10 Technical Committee

T10 Chair
John B. Lohmeyer
LSI Logic
4420 Arrows West Drive
Colorado Springs, CO 80907-3444
USA

Tel: (719) 533-7560
Fax: (719) 533-7183
Email: lohmeyer@t10.org

T10 Vice-Chair
Mark Evans
Western Digital
5863 Rue Ferrari
San Jose, CA 95138
USA

Tel: (408) 363-5257
Fax: (408) 363-5139
Email: mark.evans@wdc.com

INCITS Secretariat
INCITS Secretariat
1250 Eye Street, NW Suite 200
Washington, DC 20005

Telephone: 202-737-8888
Facsimile: 202-638-4922
Email: incits@itic.org

Information Technology Industry Council
Web site: http://www.itic.org

T10 Web Site www.t10.org

T10 Reflector To subscribe send e-mail to majordomo@T10.org with 'subscribe' in message body
To unsubscribe send e-mail to majordomo@T10.org with 'unsubscribe' in message body
Internet address for distribution via T10 reflector: T10@T10.org

Document Distribution
INCITS Online Store
managed by Techstreet
1327 Jones Drive
Ann Arbor, MI 48105
USA

Web site: http://www.techstreet.com/incits.html
Telephone: (734) 302-7801 or (800) 699-9277

Global EngineeringDocuments, an IHS Company
15 Inverness Way East
Englewood, CO 80112-5704

Telephone:303-792-2181 or
800-854-7179
Facsimile: 303-792-2192

Web site: http://global.ihs.com
Telephone: (303) 397-7956 or (303) 792-2181 or (800) 854-7179

This page contains no comments

Draft

American National Standards for Information Systems -

SCSI / ATA Translation - 2 (SAT-2)

Secretariat
National Committee for Information Technology Standards

Approved mm dd yy

American National Standards Institute, Inc.

Abstract

This standard specifies a translation layer between SCSI and ATA protocols. This translation layer is used by storage controllers to emulate objects in a SCSI logical unit using an ATA device, providing capabilities defined by SCSI standards (e.g., the SCSI Block Commands (SBC-2) and SCSI Primary Commands (SPC-3) standards). For the purposes of this standard, ATA device capabilities are defined by ATA8-AAM, ATA8-ACS, ATA8-APT, ATA8-AST, and SATA-2.6.

Draft

Page: 3

Number: 1 Author: moverby Subject: Inserted Text Date: 9/3/2008 4:40:28 PM -07'00'

insert "other"

Status

moverby Rejected 9/11/2008 11:16:36 AM -07'00'

Author: moverby Subject: Sticky Note Date: 9/11/2008 11:16:32 AM -07'00'

Rejected because this standard does define capabilities that SATLs may implement in an emulated SCSI manner.

Number: 2 Author: LSI-Penokie Subject: Highlight Date: 8/19/2008 10:02:43 AM -07'00'

This should be << SCSI Block Commands-3 (SBC-3) and SCSI Primary Commands-4 (SPC-4) standards >>

Status

moverby Accepted 11/3/2008 11:12:16 PM

Number: 3 Author: Kevin_Marks Subject: Highlight Date: 8/7/2008 11:03:20 AM -07'00'

SBC-2
s/b
SBC-3

Status

moverby Accepted 11/3/2008 11:12:13 PM

Number: 4 Author: Kevin_Marks Subject: Highlight Date: 8/7/2008 11:03:32 AM -07'00'

SPC-3
s/b
SPC-4

Status

moverby Accepted 11/3/2008 11:12:10 PM

American National Standard

Approval of an American National Standard requires verification by ANSI that the requirements for due process, consensus, and other criteria for approval have been met by the standards developer. Consensus is established when, in the judgment of the ANSI Board of Standards Review, substantial agreement has been reached by directly and materially affected interests. Substantial agreement means much more than a simple majority, but not necessarily unanimity. Consensus requires that all views and objections be considered and that effort be made toward their resolution.

The use of American National Standards is completely voluntary; their existence does not in any respect preclude anyone, whether he or she has approved the standards or not, from manufacturing, marketing, purchasing, or using products, processes, or procedures not confirming to the standards.

The American National Standards Institute does not develop standards and shall in no circumstances give interpretation on any American National Standard in the name of the American National Standards Institute. Requests for interpretations should be addressed to the secretariat or sponsor whose name appears on the title page of this standard.

CAUTION NOTICE: This American National Standard may be revised or withdrawn at any time. The procedures of the American National Standards Institute require that action be taken periodically to reaffirm, revise, or withdraw this standard. Purchasers of American National Standards may receive current information on all standards by calling or writing the American National Standards Institute.

CAUTION: The developers of this standard have requested that holders of patents that may be required for the implementation of the standard, disclose such patents to the publisher. However, neither the developers nor the publisher have undertaken a patent search in order to identify which, if any, patents may apply to this standard. As of the date of publication of this standard, following calls for the identification of patents that may be required for the implementation of the standard, notice of one or more claims has been received. By publication of this standard, no position is taken with respect to the validity of this claim or of any rights in connection therewith. The known patent holder(s) has (have), however, filed a statement of willingness to grant a license under these rights on reasonable and nondiscriminatory terms and conditions to applicants desiring to obtain such a license. Details may be obtained from the publisher. No further patent search is conducted by the developer or the publisher in respect to any standard it processes. No representation is made or implied that licenses are not required to avoid infringement in the use of this standard.

Published by
American National Standards Institute
11 West 42nd Street, New York, NY 10036

Printed in the United States of America

This page contains no comments

Contents

This page contains no comments

This page contains no comments

This page contains no comments

This page contains no comments

This page contains no comments

Tables

This page contains no comments

This page contains no comments

This page contains no comments

Figures

Numbering of figures should be sequential

Page: 13

Number: 1 Author: Kevin_Marks Subject: Sticky Note Date: 8/7/2008 11:05:22 AM -07'00'

Figure numbering is messed up in Figure Table. Multiple 8,9,10

Status
moverby Accepted 9/11/2008 11:17:45 AM -07'00'

Number: 2 Author: moverby Subject: Callout Date: 9/3/2008 4:42:36 PM -07'00'

Numbering of figures should be sequential

Status
moverby Accepted 9/11/2008 11:17:31 AM -07'00'

Revision Information

R.0 SAT-2 r00 (22 February 2007)

Created revision 0 from original SAT final document. Updated references.

R.1 SAT-2 r01 (09 July 2007)

Incorporated 07-148r0 (SAT2 - Use something other than 'comprises', Robert Sheffield) as approved by the May 2007 plenary.
Incorporated 07-146r0 (SAT2 - Fix command summary for SEND DIAGNOSTIC, Robert Sheffield) as approved by the May 2007 plenary.
Incorporated 06-250r1 (SAT-2: Application Client Log Page Translation, Mark Overby)as approved by the March 2007 plenary.
Removed reference in command summary table to READ MEDIA SERIAL number as that was removed from SAT, but the table still contained the reference.
Corrected minor typographical errors pointed out by Rob Elliott (HP)
Changes all references to direct or indirect block mapping to direct or indirect logical block mapping to match SBC-3

R.1a SAT-2 r01a (11 July 2007)

Incorrectly stated in SAT-2 r01 that 06-250r1 was incorporated as approved. What was actually incorporated was 07-074r2 (SAT2 Translation of SECURITY PROTOCOL IN/OUT, Jim Hatfield) as approved in the May 2007 plenary.
Correctly incorporated 06-250r1 (SAT-2: Application Client Log Page Translation, Mark Overby) as approved by the March 2007 plenary.

R.2 SAT-2 r02 (20 February 2008)

Updated revision history to include proposal names and authors for tracking purposes.
Incorporated editorial comments from Rob Elliott (HP) for Control Mode Page table
Incorporated 07-298r0 (SAT-2: Error Translation Mapping for ATA IDNF, Jeff Wolford) as approved by the July 2007 plenary.
Incorporated 07-201r2 (SAT-2: Translation of large block sizes, Jim Hatfield) as approved by the July 2007 plenary.
Updated previous revision history to include the names of the proposals.
Updated cover information to reflect change in Vice-Chair to Mark Evans of WD
Updated copyright information to 2008

R.2a SAT-2 r02a (9 March 2008)

Fixed numbering problems
Fixed more 2006 copyright problems to 2008
Fixed various English language problems in Clauses 3, 4, and 5. (From Rob Elliott)
Fixed incorporation of 07-201. Added editors note that the diagram has not yet been provided to the editor for incorporation.

R.3 SAT-2 r03 (25 April 2008)

Accepted all change bars from previous revisions after draft review during working group meeting in March 2008.
Incorporated 08-075r1 (SAT-2: ATA Device Security Password Feature, Curtis Stevens)
Incorporated 07-402r2 (SAT-2: SATA NCQ Priority Translation, Brad Besmer). An editorial change was made to match the SAM-4 letter ballot resolution that changes task priority to command priority.
Updated all references from SATA 2.5 to 2.6 (except for the diagram and for one with an editors note on it)
Incorporated 08-041r1 (Use period as separator in T10 standards, Rob Elliott)
Corrected some long hexadecimal numbers to use xxxx_xxxxh to be consistent with overall style.

Page: 14

Number: 1 Author: LSI-Penokie Subject: Highlight Date: 8/19/2008 10:03:31 AM -07'00'

The revision history needs to be removed in the final version.

Status
moverby Accepted 9/11/2008 11:17:52 AM -07'00'

Number: 2 Author: Kevin_Marks Subject: Sticky Note Date: 8/7/2008 11:06:26 AM -07'00'

Remove Revision History prior to forwarding.

Status
moverby Accepted 9/11/2008 11:18:06 AM -07'00'

Fixed style errors in TOC.
Incorporated 07-200r3 (WRITE LONG to WRITE UNCORRECTABLE translation, Rob Elliott)

R.4 SAT-2 r04 (05 May 2008)

Incorporated 08-016r1 (Block Characteristics VPD Page Translation, Brad Besmer)
Incorporated 08-019r2 (SAT-2 WRITE BUFFER MODE 7 to DOWNLOAD MICROCODE Mode 3, Jeff Wolford)
Resolved editor's notes about previous incorporations that required changes (changes accepted) - some notes remain pending resolution
Removed changes from "task" to "command" due to SAM-4 letter ballot changes. This needs further discussion at the working group
All SATA 2.5 references are now SATA 2.6 references (save editor's noted items)

R.5 SAT-2 r05

Added new editor's notes.
Corrected editor note numbering problems with help from Ralph Weber.
Replaced Sector Count with either ATA Sector Count or Count field depending on context
Incorporated 08-230r0 (Translation of zero-length security commands, Mark Overby)
Incorporated 07-485r6 (Additional Power Management support, Fred Knight)

R.6 SAT-2 r06

Incorporated editorial changes from June WG meeting.
Replaced issue with send or sent whenever talking about the transmission of commands
Changed most references of SAM-3 to SAM-4. Added SAM-4 to list of standards
Revised figure 2 to include ATA8-AST and removed mention of not using the AST standard
Made clause 2 match SPC-4 for general text and where to buy standards
Revised ISO/ANSI numbering for references to match SPC-4 style
Incorporated 08-239r0 (SAT-2 Definition Cleanup, Mark Overby)
Made SAS definitions match SAS-2
Updated usage of task (when meaning a command) to read command per SAM-4
Added new clause to models section for large physical sector versus logical sector and revised definitions as per guidance from WG meetings in June and July

Page: 15

Number: 1 Author: HPQ-RElliott Subject: Highlight Date: 9/3/2008 9:42:24 AM -07'00'

Add dates to R.5 and R.6 and future revision history headers

Status

moverby Rejected 10/20/2008 10:57:29 AM -07'00'

Author: moverby Subject: Sticky Note Date: 10/20/2008 10:57:23 AM -07'00'

Noted for future SAT projects, but will reject as the next version will not have a revision history.

Foreword

This foreword is not part of American National Standard INCITS ***-200x.

This standard provides a common set of definitions and requirements to establish common behavior among implementations that emulate SCSI device behavior through the combined use of ATA devices and a SCSI / ATA Translation layer (SATL). The SATL may reside in ~~a host-based driver,~~ or it may reside in a separate component (e.g., a host bus adapter or external controller) with a separate processing unit to ~~effect~~ the translation. A SATL and ATA device combination may provide a functional subset of common SCSI capabilities. There is also a range of optional emulated SCSI capabilities that may be supported ~~or not,~~ depending on the capabilities of the SATL.

This standard defines SATL capabilities in terms of SCSI capabilities as defined by the applicable SCSI standards and working drafts, and defines the elements and use of ATA protocol to provide those SCSI capabilities and services in a consistent manner among SAT implementations that implement according to this standard.

With any technical document there may arise questions of interpretation as new products are implemented. INCITS has established procedures to issue technical opinions concerning the standards developed by INCITS. These procedures may result in SCSI Technical Information Bulletins being published by INCITS.

These Bulletins, while reflecting the opinion of the Technical Committee that developed the standard, are intended solely as supplementary information to other users of the standard. This standard, ANSI BSR INCITS ***-2006, as approved through the publication and voting procedures of the American National Standards Institute, is not altered by these bulletins. Any subsequent revision to this standard may or may not reflect the contents of these Technical Information Bulletins.

Current INCITS practice is to make Technical Information Bulletins available through:

INCITS Online Store	http://www.techstreet.com/INCITS.html
managed by Techstreet	Telephone: 1-734-302-7801 or
1327 Jones Drive	1-800-699-9277
Ann Arbor, MI 48105	Facsimile: 1-734-302-7811

or

Global Engineering	http://global.ihs.com/
15 Inverness Way East	Telephone: 1-303-792-2181 or
Englewood, CO 80112-5704	1-800-854-7179
	Facsimile: 1-303-792-2192

Requests for interpretation, suggestions for improvement and addenda, or defect reports are welcome. They should be sent to the INCITS Secretariat, National Committee for Information Technology Standards, Information Technology Institute, 1250 Eye Street, NW, Suite 200, Washington, DC 20005-3922.

This standard was processed and approved for submittal to ANSI by the InterNational Committee for Information Technology Standards (INCITS). Committee approval of the standard does not necessarily imply that all committee members voted for approval.

Technical Committee T10 on Lower Level Interfaces, which developed and reviewed this standard, had the following members:

John B. Lohmeyer, Chair
George O. Penokie, Vice-Chair
Ralph O. Weber, Secretary

Page: 16

Number: 1 Author: moverby Subject: Replacement Text Date: 9/3/2008 4:44:08 PM -07'00'

host-based software or firmware

Status
moverby Accepted 10/20/2008 10:57:33 AM -07'00'

Number: 2 Author: moverby Subject: Replacement Text Date: 9/3/2008 4:44:30 PM -07'00'

perform

Status
moverby Accepted 9/11/2008 11:19:02 AM -07'00'

Number: 3 Author: moverby Subject: Cross-Out Date: 9/3/2008 4:44:53 PM -07'00'

Status
moverby Accepted 9/11/2008 11:19:15 AM -07'00'

Number: 4 Author: Kevin_Marks Subject: Highlight Date: 8/7/2008 11:08:30 AM -07'00'

George O. Penokie, Vice-Chair

s/b

Mark Evans, Vice-Chair

Status
moverby Accepted 9/11/2008 11:20:16 AM -07'00'

Number: 5 Author: LSI-Penokie Subject: Highlight Date: 8/19/2008 10:04:36 AM -07'00'

Mark Evans, Vice-Chair

Status
moverby Accepted 9/11/2008 11:20:09 AM -07'00'

Organization Represented	*Name of Representative*

Number: 1 Author: Kevin_Marks Subject: Sticky Note Date: 8/7/2008 11:08:53 AM -07'00'

Add T10 Membership list

Status

moverby Accepted 10/20/2008 10:59:16 AM -07'00'

Introduction

The SCSI / ATA Translation - 2 (SAT-2) standard is divided into the following clauses:

Clause 1 defines the scope of this standard.
Clause 2 enumerates the normative references that apply to this standard.
Clause 3 describes the definitions, symbols, abbreviations, and notation conventions used in this standard.
Clause 4 describes the general framework for defining elements of translation between SCSI and ATA protocol.
Clause 5 describes elements of SCSI / ATA Translation that relate to the SCSI architecture model.
Clause 6 describes the mapping of ~~task~~ management functions in the SATL layer.
Clause 7 provide a summary of SCSI commands mapped to ATA in this standard.
Clause 8 describes the mapping between SCSI Primary Commands and ATA protocol.
Clause 9 describes the mapping between SCSI Block Commands and ATA protocol.
Clause 10 describes the mapping of mode pages, log pages, and VPD page information to selected ATA protocol elements.
Clause 11 describes error reporting and sense data conventions for SCSI / ATA Translation.
Clause 12 describes SCSI commands and mode pages to support SCSI / ATA Translation.
Annex A describes the ~~INQUIRY~~ command translation for ATAPI devices.

Page: 18

Number: 1 Author: Kevin_Marks Subject: Highlight Date: 8/7/2008 11:11:29 AM -07'00'

Clause 6 is titled Command Management Model, seems confusing.

Status
moverby Accepted 9/11/2008 11:21:37 AM -07'00'
Author: moverby Subject: Sticky Note Date: 9/11/2008 11:21:34 AM -07'00'

Fixed by other letter ballot comment to rename to command instead of task

Number: 2 Author: moverby Subject: Replacement Text Date: 9/3/2008 5:17:32 PM -07'00'

command

Status
moverby Accepted 9/11/2008 11:21:46 AM -07'00'

Number: 3 Author: LSI-Penokie Subject: Highlight Date: 8/19/2008 10:05:28 AM -07'00'

SCSI Primary Commands-4 a

Status
moverby Rejected 10/20/2008 11:00:11 AM -07'00'
Author: moverby Subject: Sticky Note Date: 10/20/2008 11:00:08 AM -07'00'

Rejected as that would be too restrictive and would require revision with each SPC. In this case what is being discussed is not SPC specific.

Number: 4 Author: LSI-Penokie Subject: Highlight Date: 8/19/2008 10:05:38 AM -07'00'

SCSI Block Commands-3

Status
moverby Rejected 10/20/2008 11:00:27 AM -07'00'
Author: moverby Subject: Sticky Note Date: 10/20/2008 11:00:23 AM -07'00'

Too restrictive and not needed in this section.

Number: 5 Author: moverby Subject: Cross-Out Date: 9/3/2008 4:46:01 PM -07'00'

Status
moverby Accepted 9/11/2008 11:22:22 AM -07'00'
Author: moverby Subject: Sticky Note Date: 9/11/2008 11:22:18 AM -07'00'

Delete entire phrase "the INQUIRY"

Number: 6 Author: ENDL Texas Subject: Highlight Date: 8/27/2008 10:15:37 AM -07'00'

The description of Annex A in the Introduction does not match the contents of Annex A.

Status
moverby Accepted 9/11/2008 11:22:54 AM -07'00'

Number: 7 Author: Kevin_Marks Subject: Highlight Date: 8/7/2008 11:14:23 AM -07'00'

Annex A describes the INQUIRY command translation for ATAPI devices.

s/b

Annex A describes the translation for ATAPI devices.

Status
moverby Rejected 9/11/2008 11:22:39 AM -07'00'
Author: moverby Subject: Sticky Note Date: 9/11/2008 11:26:08 AM -07'00'

Rejected in favor of comment to rename to "Annex A describes the command translation for ATAPI device"

AMERICAN NATIONAL STANDARD **BSR INCITS ***-2006**

American National Standard for Information Systems -
Information Technology -
SCSI / ATA Translation

1 Scope

The set of SCSI standards specifies the interfaces, functions, and operations necessary to ensure interoperability between conforming SCSI implementations. This standard is a functional description. Conforming implementations may employ any design technique that does not violate interoperability.

This standard defines the protocol requirements of the SCSI / ATA Translation Layer (SATL) to allow conforming SCSI / ATA translating components to interoperate with ATA devices and SCSI application layers. The SATL covers the range of implementations that use ATA devices to emulate the behavior of SCSI devices as viewed by the SCSI application layer. The primary focus of this standard is to define SCSI / ATA Translation for an ATA device (see 3.1.9).

Where possible, this standard defines SCSI / ATA Translation in a manner that is consistent with the SAM-4, SPC-3, and SBC-2 standards. In some instances, the defined function of an ATA device is different from corresponding functions defined for SCSI target devices (e.g., an ATA device provides no means to abort a single ATA queued command). The translation defined in this standard, in such cases, may not be consistent with other SCSI standards. However, in such cases, this standard specifies the expected behavior, and in what manner it is inconsistent with the behavior specified in other SCSI standards.

The objective of this standard is to allow a complete set of SCSI functions while minimizing the complexity of the SATL and preserving compatibility with existing SCSI application clients.

The objectives of the SATL are:

a) to provide host computers with device independence with respect to the ATA devices that have user storage capacity, and with respect to various implementations of the translation layer used to emulate the behavior of SCSI target devices;
b) to define common features and functions representing a subset of the capabilities available in SCSI devices that apply to SCSI / ATA Translation implementations;
c) to define common methods to manage aspects of ATA devices that do not map to previously defined features and functions of SCSI, with provision made for the addition of special features and functions; and
d) to provide consistent means for discovery and control of optional SCSI features that may or may not be emulated in SCS I/ ATA translator implementations. These means are provided by specifying how transport specific features and functions are represented in a mixed-domain topology in a manner consistent with management of devices in a SCSI domain.

Page: 19

Number: 1 Author: HPQ-RElliott Subject: Highlight Date: 9/3/2008 9:42:24 AM -07'00'

2006
s/b
2008 (or 2009)

Status
moverby Accepted 9/11/2008 11:32:37 AM -07'00'

Number: 2 Author: Kevin_Marks Subject: Highlight Date: 8/7/2008 11:14:57 AM -07'00'

SPC-3, and SBC-2

s/b

SPC-4, and SBC-3

Status
moverby Accepted 11/3/2008 11:12:27 PM

Number: 3 Author: LSI-Penokie Subject: Highlight Date: 8/19/2008 10:07:07 AM -07'00'

SPC-4, and SBC-3 standards

Status
moverby Accepted 11/3/2008 11:12:20 PM

Number: 4 Author: STX-Hatfield Subject: Highlight Date: 8/12/2008 1:16:25 PM -07'00'

SPC-3, and SBC-2
s/b
SPC-4 and SBC-3

Status
moverby Accepted 11/3/2008 11:12:24 PM

Number: 5 Author: moverby Subject: Highlight Date: 9/3/2008 4:51:36 PM -07'00'

While this is true today, this shortly will no longer be true. Suggest replacing this with another suitable example (such as a defined limited queue depth for ATA that does not exist for SCSI).

Status
moverby Rejected 9/9/2008 9:32:42 AM -07'00'

Author: moverby Subject: Sticky Note Date: 9/10/2008 1:40:24 PM -07'00'

Rejected during letter ballot comment resolution as changing this might be premature.

Number: 6 Author: LSI-Penokie Subject: Highlight Date: 8/19/2008 10:09:01 AM -07'00'

It looks like there is no space between the I and the /. This needs to be fixed.

Status
moverby Accepted 9/11/2008 11:32:45 AM -07'00'

Figure 1 shows the general structure of SCSI standards. Figure 1 is not intended to imply a relationship such as a hierarchy, protocol stack, or system architecture.

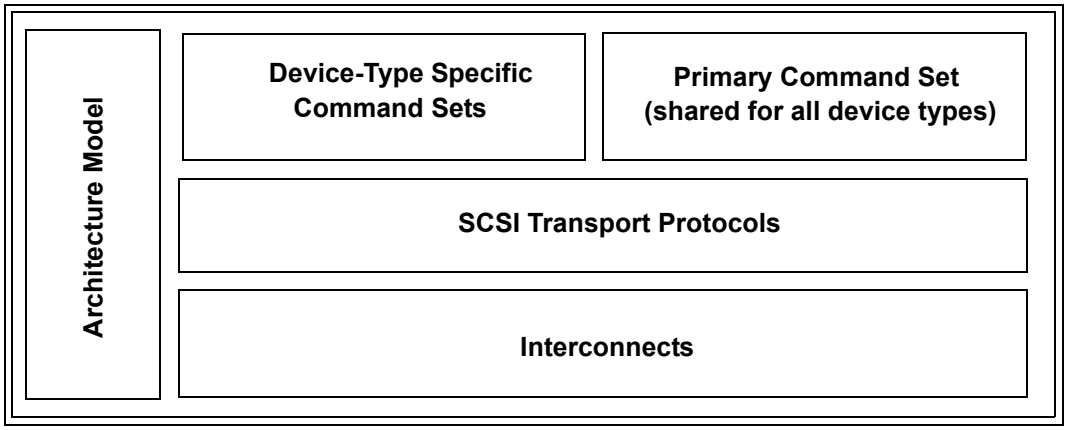

Figure 1 — SCSI document relationships

The term SCSI is used wherever it is not necessary to distinguish between the different SCSI standards.

Figure 2 shows the relationship of the ATA8 documents to each other.

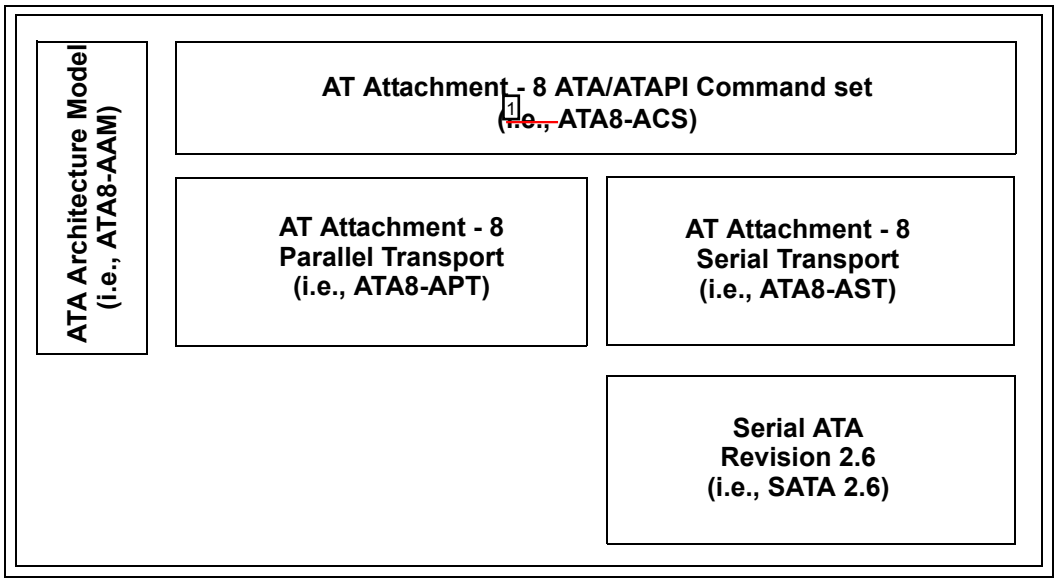

Figure 2 — ATA document structure

Page: 20

Number: 1 Author: HPQ-RElliott Subject: Cross-Out Date: 9/3/2008 9:42:24 AM -07'00'

Delete all the "i.e.,"s from figure 2. That is not used for acronyms in parenthesis - just the acronym is fine, like "(ATA8-ACS)"

Status

moverby Accepted 9/11/2008 11:33:18 AM -07'00'

Figure 3 shows the relationship of this standard to standards in both the SCSI family of standards and the ATA family of standards.

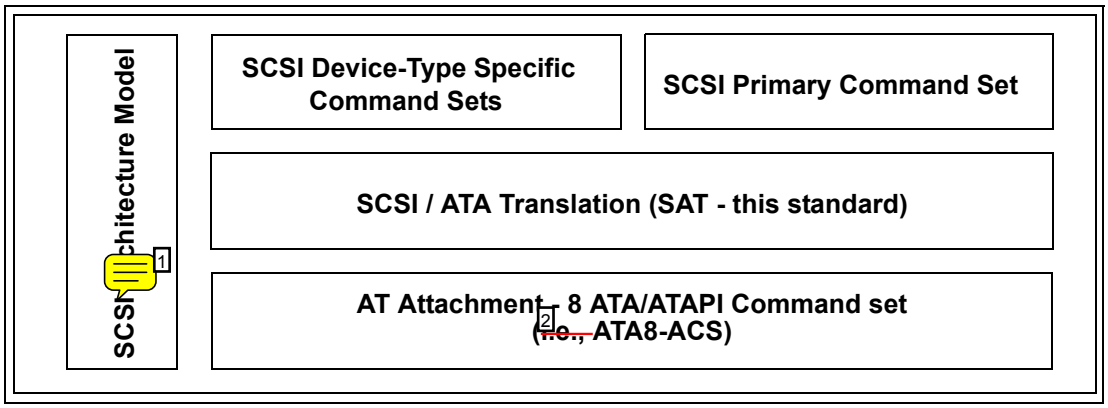

Figure 3 — SCSI / ATA Translation document role

This standard defines a translation between the SCSI application layer (see SAM-4) and ATA device protocol.

Page: 21

Number: 1 Author: Kevin_Marks Subject: Sticky Note Date: 8/7/2008 11:17:13 AM -07'00'

Should the SCSI Architecture Model box stop at SAT?

Status

moverby Rejected 10/20/2008 11:01:05 AM -07'00'

Author: moverby Subject: Sticky Note Date: 10/20/2008 11:01:01 AM -07'00'

I believe this is correct.

Number: 2 Author: HPQ-RElliott Subject: Cross-Out Date: 9/3/2008 9:42:24 AM -07'00'

Delete i.e., in figure 3 (see reasoning in comment on figure 2)

Status

moverby Accepted 9/11/2008 11:35:36 AM -07'00'

2 Normative References

2.1 Normative references

The following standards contain provisions that, by reference in the text, constitute provisions of this standard. At the time of publication, the editions indicated were valid. All standards are subject to revision, and parties to agreements based on this standard are encouraged to investigate the possibility of applying the most recent editions of the standards listed below.

2.2 Approved references

Copies of the following documents may be obtained from ANSI, an ISO member organization:

a) Approved ANSI standards;
b) approved international and regional standards (ISO and IEC); and
c) approved foreign standards (including JIS and DIN).

For further information, contact the ANSI Customer Service Department:

Phone: +1 212-642-4900
Fax: +1 212-302-1286
Web: http://www.ansi.org
E-mail: ansionline@ansi.org

or the International Committee for Information Technology Standards (INCITS):

Phone: +1 202-626-5738
Web: http://www.incits.org
E-mail: incits@itic.org

ISO/IEC 24739-1, *AT Attachment with Packet Interface - 7 (ATA/ATAPI-7)* [ANSI INCITS 397-2005]
~~ISO/IEC 14776-413, *SCSI Architecture Model - 3 (SAM-3)* [ANSI INCITS 402-2005]~~
ISO/IEC 14776-412, *SCSI Architecture Model - 2 (SAM-2)* [ANSI INCITS 366-2003]
~~ISO/IEC 14776-453, *SCSI Primary Commands - 3 (SPC-3)* [ANSI INCITS 408-2005]~~
~~ISO/IEC 14776-322, *SCSI Block Commands - 2 (SBC-2)* [ANSI INCITS 405-2005]~~
~~ISO/IEC 14776-151, *Serial Attached SCSI - 1.1 (SAS-1.1)* [ANSI INCITS 417-2006]~~

2.3 References under development

At the time of publication, the following referenced standards were still under development. For information on the current status of the document, or regarding availability, contact the relevant standards body or other organization as indicated.

AT Attachment-8 Architecture Model (ATA8-AAM) [T13/1700D]
AT Attachment-8 ATA/ATAPI Command Set (ATA8-ACS) [T13/1699D]
AT Attachment-8 Parallel Transport (ATA8-APT) [T13/1698D]
ISO/IEC 14776-454, *SCSI Primary Commands - 4 (SPC-4)* [T10/1731-D]
ISO/IEC 14776-323, *SCSI Block Commands - 3 (SBC-3)* [T10/1799-D]
ISO/IEC 14776-414, *SCSI Architecture Model - 4 (SAM-4)* [T10/1683-D]

2.4 Other references

For information on the current status of the listed document(s), or regarding availability, contact the indicated organization.

Serial ATA Revision 2.6 (SATA-2.6)

The SATA 2.6 document may be obtained from Serial ATA International Organization (SATA IO) at http://www.sata-io.org.

Page: 22

Number: 1 Author: HPQ-RElliott Subject: Highlight Date: 9/3/2008 9:42:24 AM -07'00'

Approved
s/b
lowercase

(or b) and c) should also start capitalized)

Status
moverby Accepted 9/11/2008 11:35:49 AM -07'00'

Number: 2 Author: HPQ-RElliott Subject: Cross-Out Date: 9/3/2008 9:42:24 AM -07'00'

Delete
ISO/IEC 14776-413, SCSI Architecture Model - 3 (SAM-3) [ANSI INCITS 402-2005]

and upgrade all references to SAM-4

Status
moverby Accepted 11/3/2008 11:12:32 PM

Number: 3 Author: Kevin_Marks Subject: Sticky Note Date: 8/8/2008 8:20:27 AM -07'00'

Following global comment on using SAM-4, SPC-4 and SBC-3, remove Approved References: ATA-7, since its based on 8 according to above, SAM-3, SPC-3, SBC-2

Also SAS-2 missing, but referenced in definitions

SAM-2 ok, because of non autosense reference.

Status
moverby Accepted 11/3/2008 11:12:40 PM

Number: 4 Author: HPQ-RElliott Subject: Cross-Out Date: 9/3/2008 9:42:24 AM -07'00'

Delete
ISO/IEC 14776-453, SCSI Primary Commands - 3 (SPC-3) [ANSI INCITS 408-2005]

and upgrade all SPC-3 references to SPC-4

Status
moverby Accepted 11/3/2008 11:12:48 PM

Number: 5 Author: LSI-Penokie Subject: Cross-Out Date: 8/19/2008 10:14:49 AM -07'00'

Replace all references to SPC-3 with SPC-4 within this standard.

Status
moverby Accepted 11/3/2008 11:12:43 PM

Number: 6 Author: HPQ-RElliott Subject: Note Date: 9/3/2008 9:42:24 AM -07'00'

Add FCP-3 (or FCP-4), as that is used in some example figures and text.

Status
moverby Rejected 9/9/2008 9:40:13 AM -07'00'

Author: moverby Subject: Sticky Note Date: 9/10/2008 1:40:50 PM -07'00'

Rejected in favor of removing all references to FCP-3 or FCP-4.

Number: 7 Author: HPQ-RElliott Subject: Cross-Out Date: 9/3/2008 9:42:24 AM -07'00'

Delete
ISO/IEC 14776-322, SCSI Block Commands - 2 (SBC-2) [ANSI INCITS 405-2005]

and upgrade all SBC-2 references to SBC-3, which should be nearing completion

Status
moverby Accepted 11/3/2008 11:13:00 PM

Number: 8 Author: LSI-Penokie Subject: Cross-Out Date: 8/19/2008 10:16:31 AM -07'00'

Replace all references to SBC-2 with SBC-3 within this standard.

Status
moverby Accepted 11/3/2008 11:12:57 PM

Number: 9 Author: LSI-Penokie Subject: Cross-Out Date: 8/19/2008 10:19:11 AM -07'00'

Replace all references to SAS-1.1 with SAS-2 within this standard.

Status
moverby Accepted 11/3/2008 11:13:04 PM

Number: 10 Author: HPQ-RElliott Subject: Highlight Date: 9/3/2008 9:42:24 AM -07'00'

Delete
ISO/IEC 14776-151, *Serial Attached SCSI - 1.1 (SAS-1.1)* [ANSI INCITS 417-2006]

and upgrade all SAS-1.1 references to SAS-2

Status
moverby Accepted 11/3/2008 11:13:07 PM

Number: 11 Author: HPQ-RElliott Subject: Note Date: 9/3/2008 9:42:24 AM -07'00'

Include the planned ISO/IEC numbers for the ATA8 documents

Status
moverby Rejected 11/4/2008 9:57:12 AM

Author: moverby Subject: Sticky Note Date: 11/4/2008 9:57:09 AM

No ISO numbers are assigned at this time.

Number: 12 Author: LSI-Penokie Subject: Sticky Note Date: 8/19/2008 10:19:37 AM -07'00'

SAS-2 needs to be added to this list.

Status
moverby Accepted 11/3/2008 11:13:16 PM

Comments from page 22 continued on next page

2 Normative References

2.1 Normative references

The following standards contain provisions that, by reference in the text, constitute provisions of this standard. At the time of publication, the editions indicated were valid. All standards are subject to revision, and parties to agreements based on this standard are encouraged to investigate the possibility of applying the most recent editions of the standards listed below.

2.2 Approved references

Copies of the following documents may be obtained from ANSI, an ISO member organization:

a) Approved ANSI standards;
b) approved international and regional standards (ISO and IEC); and
c) approved foreign standards (including JIS and DIN).

For further information, contact the ANSI Customer Service Department:

Phone: +1 212-642-4900
Fax: +1 212-302-1286
Web: http://www.ansi.org
E-mail: ansionline@ansi.org

or the International Committee for Information Technology Standards (INCITS):

Phone: +1 202-626-5738
Web: http://www.incits.org
E-mail: incits@itic.org

ISO/IEC 24739-1, *AT Attachment with Packet Interface - 7 (ATA/ATAPI-7)* [ANSI INCITS 397-2005]
~~ISO/IEC 14776-413, *SCSI Architecture Model - 3 (SAM-3)* [ANSI INCITS 402-2005]~~
ISO/IEC 14776-412, *SCSI Architecture Model - 2 (SAM-2)* [ANSI INCITS 366-2003]
~~ISO/IEC 14776-453, *SCSI Primary Commands - 3 (SPC-3)* [ANSI INCITS 408-2005]~~
~~ISO/IEC 14776-322, *SCSI Block Commands - 2 (SBC-2)* [ANSI INCITS 405-2005]~~
~~ISO/IEC 14776-151, *Serial Attached SCSI - 1.1 (SAS-1.1)* [ANSI INCITS 417-2006]~~

2.3 References under development

At the time of publication, the following referenced standards were still under development. For information on the current status of the document, or regarding availability, contact the relevant standards body or other organization as indicated.

AT Attachment-8 Architecture Model (ATA8-AAM) [T13/1700D]
AT Attachment-8 ATA/ATAPI Command Set (ATA8-ACS) [T13/1699D]
AT Attachment-8 Parallel Transport (ATA8-APT) [T13/1698D]
ISO/IEC 14776-454, *SCSI Primary Commands - 4 (SPC-4)* [T10/1731-D]
ISO/IEC 14776-323, *SCSI Block Commands - 3 (SBC-3)* [T10/1799-D]
ISO/IEC 14776-414, *SCSI Architecture Model - 4 (SAM-4)* [T10/1683-D]

2.4 Other references

For information on the current status of the listed document(s), or regarding availability, contact the indicated organization.

Serial ATA Revision 2.6 (SATA-2.6)

The SATA 2.6 document may be obtained from Serial ATA International Organization (SATA IO) at http://www.sata-io.org.

Number: 13 Author: HPQ-RElliott Subject: Highlight Date: 9/3/2008 9:42:24 AM -07'00'

SAM-4 has an ANSI INCITS number now, so the T10 project number can be replaced.

The international ISO/IEC 14776-414 is still "under development" so don't move this into 2.2.

Status

moverby Accepted 11/3/2008 11:13:25 PM

~~*Mass Storage Class Bulk-Only Transport 1.0 (USB-BOT)*~~

~~The USB-BOT document may be obtained from the USB Implementers Forum, Inc. at http://www.usb.org.~~

Page: 23

Number: 1 Author: moverby Subject: Cross-Out Date: 9/3/2008 5:08:52 PM -07'00'

The BOT document is not (or no longer referenced except in a definition that is the subject of a separate comment).

Status

moverby Rejected 9/9/2008 9:48:59 AM -07'00'

Author: moverby Subject: Sticky Note Date: 9/10/2008 1:41:08 PM -07'00'

Rejected because this was deemed necessary for the ATA pass-through TPSIU.

Number: 2 Author: LSI-Besmer Subject: Note Date: 8/26/2008 8:07:44 PM -07'00'

Do we have any references to the USB-BOT standard?

Status

moverby Rejected 9/11/2008 12:39:59 PM -07'00'

Author: moverby Subject: Sticky Note Date: 9/11/2008 12:39:56 PM -07'00'

Yes. Reference needs to stay.

3 Definitions, symbols, abbreviations, and conventions

3.1 Definitions

3.1.1 additional sense code: A combination of the ADDITIONAL SENSE CODE field and the ADDITIONAL SENSE CODE QUALIFIER field in the sense data (see SPC-3).

3.1.2 Advanced Power Management (APM): The Advanced Power Management feature set as defined in ATA8-ACS.

3.1.3 allocation length: A value in the ALLOCATION LENGTH field of a CDB that specifies the maximum number of bytes that an application client has allocated in the Data-In Buffer, and that is used to limit the maximum amount of variable length data (e.g., mode data, log data, diagnostic data) returned to an application client (see SPC-3).

3.1.4 application client: An object that is the source of SCSI commands (see SAM-4).

3.1.5 AT Attachment (ATA): A family of standards and specifications that define the attachment of storage devices to hosts (see ATA8-AAM, ATA8-ACS, ATA8-APT, and SATA-2.6).

3.1.6 AT Attachment Packet Interface (ATAPI): The PACKET Command feature set, as defined in ATA standards, that provides the capability to encapsulate SCSI and other types of commands and pass them through an ATA transport.

3.1.7 ATA abort retry: A policy implemented by a SATL whereby the SATL retries ATA commands aborted by ATA collateral abort (see 3.1.8) once.

3.1.8 ATA collateral abort: An ATA command that is aborted as a result of a different command being aborted when an ATA device is processing queued commands (i.e., NCQ or TCQ).

3.1.9 ATA device: A device ~~that is compliant with the~~ ATA standards and implements the General feature set.

3.1.10 ATA device capacity: The ATA logical sector size, in bytes, (see 3.1.16) times one more than the ATA maximum LBA (see 3.1.17).

3.1.11 ATA domain: An I/O subsystem that is made up of one ATA host, a service delivery subsystem, and one or more ATA devices or ATAPI devices (see ATA8-AAM).

3.1.12 ATA flush command: A FLUSH CACHE command or a FLUSH CACHE EXT command (see ATA8-ACS).

3.1.13 ATA hardware reset: The routines performed by the ATA device server and the ATA device port in an ATA device after a hardware reset event occurs (see ATA8-AAM).

3.1.14 ATA host: An object that originates requests to be processed by an ATA device or an ATAPI device.

3.1.15 ATA LBA: A logical block address (see 3.1.48) used to reference a logical sector in an ATA device (see ATA8-ACS).

3.1.16 ATA logical sector size: The size of an ATA logical sector in bytes, ~~calculated as two times the value returned in ATA IDENTIFY DEVICE data words 118:117 (see ATA8-ACS) if the ATA device returns a value of one in ATA IDENTIFY DEVICE data word 106 bit 12 (i.e., the ATA device supports the Long Logical Sector feature set). The size of an ATA Logical Sector is 512 bytes if the ATA device returns a value of zero in ATA IDENTIFY DEVICE data word 106 bit 12 (i.e., the ATA device does not support the Long Logical Sector feature set)~~.

Page: 24

Number: 1 Author: HPQ-RElliott Subject: Underline Date: 9/3/2008 9:42:24 AM -07'00'

(global)

For cross-references in definitions that apply to the entire defined term, use "xxx. See SPC-3." format. Use "(see SPC-3)" format just for references for the words preceding it in the sentence."

Status
moverby Accepted 10/20/2008 11:01:45 AM -07'00'

Number: 2 Author: Kevin_Marks Subject: Highlight Date: 8/7/2008 11:22:43 AM -07'00'

SPC-3
s/b
SPC-4

Status
moverby Accepted 11/3/2008 11:13:30 PM

Number: 3 Author: Kevin_Marks Subject: Cross-Out Date: 8/7/2008 11:24:10 AM -07'00'

,

Status
moverby Accepted 9/11/2008 12:55:45 PM -07'00'

Number: 4 Author: Kevin_Marks Subject: Highlight Date: 8/7/2008 11:25:08 AM -07'00'

SPC-3
s/b
SPC-4

Status
moverby Accepted 11/3/2008 11:13:34 PM

Number: 5 Author: Kevin_Marks Subject: Cross-Out Date: 8/7/2008 11:29:03 AM -07'00'

,

Status
moverby Rejected 10/20/2008 1:18:46 PM -07'00'

Number: 6 Author: Kevin_Marks Subject: Highlight Date: 8/7/2008 11:30:06 AM -07'00'

through
s/b
over

Status
moverby Accepted 9/11/2008 12:40:13 PM -07'00'

Number: 7 Author: moverby Subject: Replacement Text Date: 9/8/2008 10:54:03 PM -07'00'

compliant with

Status
moverby Accepted 9/11/2008 12:57:11 PM -07'00'

Number: 8 Author: LSI-Penokie Subject: Highlight Date: 8/19/2008 10:31:31 AM -07'00'

All of this << calculated as two times the value returned in ATA IDENTIFY DEVICE data words 118:117 (see ATA8-ACS) if the ATA device returns a value of one in ATA IDENTIFY DEVICE data word 106 bit 12 (i.e., the ATA device supports the Long Logical Sector feature set). The size of an ATA Logical Sector is 512 bytes if the ATA device returns a value of zero in ATA IDENTIFY DEVICE data word 106 bit 12 (i.e., the ATA device does not support the Long Logical Sector feature set). >>should be describe in the main body of the text not part of the definition.

Status
moverby Accepted 10/20/2008 11:02:18 AM -07'00'

Author: moverby Subject: Sticky Note Date: 10/20/2008 11:02:15 AM -07'00'

Agreed. This should be a cross reference to the next section in clause 4.

Number: 9 Author: moverby Subject: Replacement Text Date: 9/8/2008 10:56:09 PM -07'00'

(see 5.7)

Status
moverby Accepted 9/11/2008 12:57:53 PM -07'00'

~~NOTE 1 - The Logical Sector Size indicated by an ATA device is represented in words; therefore, the number of bytes in an ATA device logical sector is two times the value indicated in the Logical Sector Size.~~

3.1.17 ATA maximum LBA: The maximum user LBA for the 48-bit address feature set returned in ATA IDENTIFY DEVICE data words (103:100) minus one if the ATA device returns a value of one in ATA IDENTIFY DEVICE data word 86 bit 10 (i.e., the ATA device supports the 48-bit address feature set), or the total number of user addressable sectors returned in ATA IDENTIFY DEVICE data words (61:60) minus one if the ATA device returns a value of zero in ATA IDENTIFY DEVICE data word 86 bit 10 (i.e., the ATA device does not support the 48-bit address feature set) (see ATA8-ACS),

3.1.18 ATA nexus loss event: A transport-specific event where an ATA host port is no longer in communication with an ATA device port (see ATA8-AAM, see 5.5).

3.1.19 ATA non-queued command: An ATA command that is not an ATA queued command (see 3.1.20).

3.1.20 ATA queued command: A READ DMA QUEUED, READ DMA QUEUED EXT, WRITE DMA QUEUED, WRITE DMA QUEUED EXT, WRITE DMA QUEUED FUA EXT, READ FPDMA QUEUED, or WRITE FPDMA QUEUED command (see ATA8-ACS).

3.1.21 ATA read command: A READ DMA, READ DMA EXT, READ DMA QUEUED, READ DMA QUEUED EXT, READ MULTIPLE, READ MULTIPLE EXT, READ SECTOR(S), READ SECTOR(S) EXT, or READ FPDMA QUEUED (see ATA8-ACS).

3.1.22 ATA Sector Count: A count of ATA logical sectors to transfer or process, represented by the Count field in an ATA command (see ATA8-ACS).

3.1.23 ATA software reset: A reset that is triggered by an ATA task management function request (see ATA8-AAM, see 5.6).

3.1.24 ATA verify command: A READ VERIFY SECTOR(S) or ATA READ VERIFY SECTOR(S) EXT (see ATA8-ACS).

3.1.25 ATA volatile settings: ATA device settings affecting the way an ATA device responds to ATA commands that are configurable using ATA commands (e.g., ATA SET FEATURES or ATA SET MAX EXT), and that are set by the SATL to correspond to SCSI mode parameters, log parameters, or INQUIRY data.

3.1.26 ATA write command: A WRITE DMA, WRITE DMA EXT, WRITE DMA FUA EXT, WRITE DMA QUEUED, WRITE DMA QUEUED EXT, WRITE DMA QUEUED FUA EXT, WRITE MULTIPLE, WRITE MULTIPLE EXT, WRITE MULTIPLE FUA EXT, WRITE SECTOR(S), WRITE SECTOR(S) EXT, or WRITE FPDMA QUEUED (see ATA8-ACS).

3.1.27 ATAPI device: A device that is compliant with the ATA standards and implements the PACKET ~~command~~ feature set (see ATA8-ACS).

3.1.28 auto-contingent allegiance (ACA): The task set condition established following the return of a CHECK CONDITION status when the NACA bit is set to one in the CONTROL byte (see SAM-4).

3.1.29 autosense: Sense data that is returned in the same I_T_L_Q nexus transaction as the CHECK CONDITION status (see SAM-4). The alternative to autosense (i.e., use of a REQUEST SENSE command) is defined in SAM-2.

NOTE 2 - SAM-4 specifies what SAM-2 defines as autosense as the only valid way of returning SENSE data, but does not refer to it as autosense.

3.1.30 big-endian: A format for storage or transmission of binary data in which the most significant byte appears first. In a multi-byte value, the byte containing the most significant bit is stored in the lowest memory address and transmitted first and the byte containing the least significant bit is stored in the highest memory

Number: 1 Author: moverby Subject: Cross-Out Date: 9/8/2008 11:00:06 PM -07'00'

Status
moverby Accepted 9/11/2008 1:54:28 PM -07'00'

Number: 2 Author: LSI-Penokie Subject: Highlight Date: 8/19/2008 10:32:30 AM -07'00'

This note << NOTE 1 - The Logical Sector >> should be describe in the main body of the text not part of the definition.

Status
moverby Accepted 9/11/2008 1:56:17 PM -07'00'
Author: moverby Subject: Sticky Note Date: 9/11/2008 1:56:14 PM -07'00'
Accepted by deleting the note and is now referenced as part of the logical / physical mapping clause in clause 5.

Number: 3 Author: LSI-Penokie Subject: Highlight Date: 8/19/2008 10:33:56 AM -07'00'

This << represented in words; therefore, the number >> should be << represented in words, therefore, the number >>. The semicolon is changed to a comma.

Status
moverby Rejected 9/11/2008 1:55:43 PM -07'00'
Author: moverby Subject: Sticky Note Date: 9/11/2008 1:55:40 PM -07'00'
Rejected as this note has been deleted through another letter ballot comment as the material is now covered in the models (clause 5).

Number: 4 Author: LSI-Penokie Subject: Highlight Date: 8/19/2008 10:35:37 AM -07'00'

All of this << returned in ATA IDENTIFY DEVICE data words (103:100) minus one if the ATA device returns a value of one in ATA IDENTIFY DEVICE data word 86 bit 10 (i.e., the ATA device supports the 48-bit address feature set), or the total number of user addressable sectors returned in ATA IDENTIFY DEVICE data words (61:60) minus one if the ATA device returns a value of zero in ATA IDENTIFY DEVICE data word 86 bit 10 (i.e., the ATA device does not support the 48-bit address feature set) (see ATA8-ACS), >>should be describe in the main body of the text not part of the definition.

Status
moverby Accepted 10/20/2008 11:02:51 AM -07'00'
Author: moverby Subject: Sticky Note Date: 10/20/2008 11:02:48 AM -07'00'
Agreed. This will cross reference to the new section in clause 4 describing this.

Number: 5 Author: Kevin_Marks Subject: Highlight Date: 8/7/2008 12:17:31 PM -07'00'

address
s/b
Address

Status
moverby Accepted 10/20/2008 1:19:17 PM -07'00'

Number: 6 Author: Kevin_Marks Subject: Highlight Date: 8/7/2008 12:17:42 PM -07'00'

address
s/b
Address

Status
moverby Accepted 10/20/2008 1:19:20 PM -07'00'

Number: 7 Author: Kevin_Marks Subject: Highlight Date: 8/7/2008 12:17:54 PM -07'00'

address
s/b
Address

Status
moverby Accepted 10/20/2008 1:19:23 PM -07'00'

Number: 8 Author: Kevin_Marks Subject: Cross-Out Date: 8/7/2008 12:37:34 PM -07'00'

Status
moverby Rejected 9/8/2008 11:27:25 PM -07'00'
Author: moverby Subject: Sticky Note Date: 9/10/2008 1:41:29 PM -07'00'
The comma is correct

Number: 9 Author: Kevin_Marks Subject: Cross-Out Date: 8/7/2008 12:37:15 PM -07'00'

,

Status
moverby Rejected 10/20/2008 11:03:04 AM -07'00'

Number: 10 Author: Kevin_Marks Subject: Highlight Date: 8/7/2008 12:38:45 PM -07'00'

QUEUED
s/b
QUEUED command

Status
moverby Accepted 9/11/2008 1:57:03 PM -07'00'

Number: 11 Author: Kevin_Marks Subject: Highlight Date: 8/7/2008 12:39:03 PM -07'00'

EXT (
s/b
EXT command (

Status
moverby Accepted 10/20/2008 11:03:14 AM -07'00'

Number: 12 Author: Kevin_Marks Subject: Highlight Date: 8/7/2008 12:39:50 PM -07'00'

EXT),
s/b
EXT command),

Status

Comments from page 25 continued on next page

~~NOTE 1 - The Logical Sector Size indicated by an ATA device is represented in words; therefore, the number of bytes in an ATA device logical sector is two times the value indicated in the Logical Sector Size.~~

3.1.17 ATA maximum LBA: The maximum user LBA for the 48-bit address feature set returned in ATA IDENTIFY DEVICE data words (103:100) minus one if the ATA device returns a value of one in ATA IDENTIFY DEVICE data word 86 bit 10 (i.e., the ATA device supports the 48-bit address feature set), or the total number of user addressable sectors returned in ATA IDENTIFY DEVICE data words (61:60) minus one if the ATA device returns a value of zero in ATA IDENTIFY DEVICE data word 86 bit 10 (i.e., the ATA device does not support the 48-bit address feature set) (see ATA8-ACS),

3.1.18 ATA nexus loss event: A transport-specific event where an ATA host port is no longer in communication with an ATA device port (see ATA8-AAM, see 5.5).

3.1.19 ATA non-queued command: An ATA command that is not an ATA queued command (see 3.1.20).

3.1.20 ATA queued command: A READ DMA QUEUED, READ DMA QUEUED EXT, WRITE DMA QUEUED, WRITE DMA QUEUED EXT, WRITE DMA QUEUED FUA EXT, READ FPDMA QUEUED~~,~~ or WRITE FPDMA QUEUED command (see ATA8-ACS).

3.1.21 ATA read command: A READ DMA, READ DMA EXT, READ DMA QUEUED, READ DMA QUEUED EXT, READ MULTIPLE, READ MULTIPLE EXT, READ SECTOR(S), READ SECTOR(S) EXT~~,~~ or READ FPDMA QUEUED (see ATA8-ACS).

3.1.22 ATA Sector Count: A count of ATA logical sectors to transfer or process, represented by the Count field in an ATA command (see ATA8-ACS).

3.1.23 ATA software reset: A reset that is triggered by an ATA task management function request (see ATA8-AAM, see 5.6).

3.1.24 ATA verify command: A READ VERIFY SECTOR(S) or ATA READ VERIFY SECTOR(S) EXT (see ATA8-ACS).

3.1.25 ATA volatile settings: ATA device settings affecting the way an ATA device responds to ATA commands that are configurable using ATA commands (e.g., ATA SET FEATURES or ATA SET MAX EXT), and that are set by the SATL to correspond to SCSI mode parameters, log parameters, or INQUIRY data.

3.1.26 ATA write command: A WRITE DMA, WRITE DMA EXT, WRITE DMA FUA EXT, WRITE DMA QUEUED, WRITE DMA QUEUED EXT, WRITE DMA QUEUED FUA EXT, WRITE MULTIPLE, WRITE MULTIPLE EXT, WRITE MULTIPLE FUA EXT, WRITE SECTOR(S), WRITE SECTOR(S) EXT, or WRITE FPDMA 13 QUEUED (see ATA8-ACS).

3.1.27 ATAPI device: A device that is compliant with the ATA standards and implements the PACKET 14 ~~command~~ feature set (see ATA8-ACS).

3.1.28 auto-contingent allegiance (ACA): The task set condition established following the return of a CHECK CONDITION status when the NACA bit is set to one in the CONTROL byte (see SAM-4).

3.1.29 autosense: Sense data that is returned in the same I_T_L_Q nexus transaction as the CHECK CONDITION status (see SAM-4). The alternative to autosense (i.e., use of a REQUEST SENSE command) is defined in SAM-2.

NOTE 2 - SAM-4 specifies what SAM-2 defines as autosense as the only valid way of returning SENSE data, but does not refer to it as autosense.

3.1.30 big-endian: A format for storage or transmission of binary data in which the most significant byte appears first. In a multi-byte value, the byte containing the most significant bit is stored in the lowest memory address and transmitted first and the byte containing the least significant bit is stored in the highest memory

moverby Accepted 10/20/2008 11:03:26 AM -07'00'

Number: 13 Author: Kevin_Marks Subject: Highlight Date: 8/7/2008 12:40:28 PM -07'00'

QUEUED (see

s/b

QUEUED command (see

Status

moverby Accepted 10/20/2008 11:03:30 AM -07'00'

Number: 14 Author: Kevin_Marks Subject: Cross-Out Date: 8/7/2008 12:44:21 PM -07'00'

Status

moverby Accepted 10/20/2008 11:03:38 AM -07'00'

address and transmitted last (e.g., for the value 0080h, the byte containing 00h is stored in the lowest memory address and the byte containing 80h is stored in the highest memory address).

3.1.31 byte: A sequence of eight contiguous bits considered as a unit.

3.1.32 command: [1]An object within the logical unit representing the work performed by a device server (see SAM-4).

3.1.33 command descriptor block (CDB): A structure used to communicate a command from a SCSI application client to a SCSI device server.

3.1.34 device server: An object within the logical unit that processes SCSI commands according to the rules for command management (see SAM-4).

3.1.35 direct logical block mapping: A SATL implementation that maps logical blocks on a logical unit one-for-one with ATA logical sectors on an ATA device, where the LBA of a logical block has the same value as the LBA of the corresponding ATA logical sector and the number of bytes in a logical block equals the number of bytes in an ATA logical sector (see 9.1.2).

3.1.36 domain: A SCSI domain (see SAM-4) or an ATA domain (see ATA8-AAM).

3.1.37 DRQ data block: A unit of data words associated with available status when using either the PIO data-in command protocol or the PIO data-out command protocol (see ATA8-ACS)

3.1.38 field: A group of one or more contiguous bits

3.1.39 indirect logical block mapping: A SATL implementation that does not follow the constraints of direct logical block mapping (see 3.1.35 and 9.1.3).

3.1.40 I_T nexus: A nexus between a SCSI initiator port and a SCSI target port (see SAM-4).

3.1.41 I_T_L nexus: A nexus between a SCSI initiator port, a SCSI target port[2], and a logical unit (see SAM-4).

3.1.42 I_T_L_Q nexus: A nexus between a SCSI initiator port, a SCSI target port, a logical unit[3], and a command (see SAM-4).

3.1.43 least significant bit (LSB): In a binary code, the bit or bit position with the smallest numerical weighting in a group of bits that, when taken as a whole, represent a numerical value (e.g., in the number 0001b, the bit that is set to one).

3.1.44 link reset: Performing the link reset sequence.

3.1.45 link reset sequence: A phy reset sequence (see SATA-2.6).

3.1.46 little-endian: A format for storage or transmission of binary data in which the least significant byte appears first. In a multi-byte value, the byte containing the least significant bit is stored in the lowest memory address and transmitted first and the byte containing the most significant bit is stored in the highest memory address and transmitted last (e.g., for the value 0080h, the byte containing 80h is stored in the lowest memory address and the byte containing 00h is stored in the highest memory address).

3.1.47 logical block: A set of user data [4]~~words~~ accessed and referenced as a unit.

3.1.48 logical block address (LBA): The value used to reference a logical block.

3.1.49 logical unit: An externally addressable entity within a SCSI target device. See SAM-4 for a detailed definition of a logical unit.

Page: 26

Number: 1 Author: bmartin Subject: Comment on Text Date: 9/4/2008 12:39:12 AM -07'00'

Why is this different than SAM-4 definition? How is this an object?

Status
moverby Accepted 10/20/2008 11:04:30 AM -07'00'

Author: moverby Subject: Sticky Note Date: 10/20/2008 11:04:27 AM -07'00'

Make match the SAM-4 definition.

Number: 2 Author: Kevin_Marks Subject: Cross-Out Date: 8/7/2008 7:11:55 PM -07'00'

Status
moverby Rejected 10/20/2008 11:03:54 AM -07'00'

Number: 3 Author: Kevin_Marks Subject: Cross-Out Date: 8/7/2008 7:12:03 PM -07'00'

Status
moverby Rejected 10/20/2008 11:03:59 AM -07'00'

Number: 4 Author: Kevin_Marks Subject: Cross-Out Date: 8/7/2008 7:13:37 PM -07'00'

Status
moverby Accepted 10/20/2008 2:47:56 PM -07'00'

Author: moverby Subject: Sticky Note Date: 10/20/2008 2:47:51 PM -07'00'

Make the definition the same as the SBC definition.

3.1.50 logical unit capacity: The capacity of a logical unit in bytes calculated as length in bytes of each logical block times one more than the LBA of the last logical block on the logical unit.

3.1.51 logical unit number (LUN): An identifier for a logical unit.

3.1.52 logical unit reset event: An event that triggers a logical unit reset (see SAM-4).

3.1.53 logical unit reset: A condition resulting from a hard reset condition or a logical unit reset event in which the logical unit performs the logical unit reset operations described in SAM-4, SPC-3, and this standard.

3.1.54 medium: The material on which data is stored (e.g., a magnetic disk).

3.1.55 most significant bit (MSB): In a binary code, the bit or bit position with the largest numerical weighting in a group of bits that, when taken as a whole, represent a numerical value (e.g., in the number 1000b, the bit that is set to one).

3.1.56 native command queuing (NCQ): A method by which a SATA device that does not implement the PACKET Command feature set may maintain and order the processing of up to 32 outstanding commands (see ATA8-ACS).

3.1.57 nexus: A relationship between a SCSI initiator port and a SCSI target port that may extend to a logical unit and a command (see SAM-4).

3.1.58 non-queued command: An ATA non-queued command (see 3.1.19).

3.1.59 object: An architectural abstraction or container that encapsulates data types, services, or other objects that are related in some way.

3.1.60 Parallel ATA (PATA): A parallel transport protocol (see ATA8-APT).

3.1.61 PATA bus: All of the conductors and connectors required to attain signal line continuity between every driver, receiver, and terminator for each signal between one PATA host and one or two PATA devices (see ATA8-APT).

3.1.62 PATA device: An ATA device or ATAPI device that uses the PATA transport protocol (see ATA8-APT).

3.1.63 PATA host: An ATA host that uses the PATA transport protocol (see ATA8-APT).

3.1.64 power on: Power being applied.

3.1.65 queued command: An ATA queued command (see 3.1.20), or a SCSI command received by the SATL from an application client for an emulated logical unit while the emulated logical unit is processing another SCSI command (see SAM-4).

3.1.66 reset event: A transport protocol specific event that results in a hard reset condition (see SAM-4) or a hardware reset (see ATA8-AAM).

3.1.67 SAS address: An identifier assigned to a SAS port or expander device (see SAS-2).

3.1.68 SAS initiator device: A device containing SSP, STP, and/or SMP initiator ports in a SAS domain (see SAS-2).

3.1.69 SAS initiator port: An SSP initiator port, STP initiator port, and/or SMP initiator port in a SAS domain (see SAS-2).

3.1.70 SATA device: An ATA device or ATAPI device that uses the Serial ATA transport protocol (see SATA-2.6).

Page: 27

Number: 1 Author: HPQ-RElliott Subject: Note Date: 9/3/2008 9:42:24 AM -07'00'

After LUN definition, add "See SAM-4."

Status
moverby Accepted 10/20/2008 11:04:38 AM -07'00'

Number: 2 Author: Kevin_Marks Subject: Highlight Date: 8/7/2008 7:14:47 PM -07'00'

SPC-3
s/b
SPC-4

Status
moverby Accepted 11/3/2008 11:13:37 PM

Number: 3 Author: Kevin_Marks Subject: Highlight Date: 8/7/2008 7:48:57 PM -07'00'

(see ATA8-ACS).
s/b
(see SATA-2.6).

Most NCQ related material in this standard refer to SAS 2.6

Status
moverby Rejected 9/9/2008 9:50:14 AM -07'00'

Author: moverby Subject: Sticky Note Date: 9/10/2008 1:41:57 PM -07'00'

ATA8-ACS incorporates all NCQ command-based material now.

3.1.71 SATA host: An ATA host that implements the Serial ATA transport protocol (see SATA-2.6).

3.1.72 SCSI / ATA Translation layer (SATL): The functional layer defined in this standard that uses an ATA device to emulate objects in a SCSI logical unit, including the device server, task manager, and task set (see SAM-4).

3.1.73 SCSI device: A device that contains one or more SCSI ports that are connected to a service delivery subsystem and supports a SCSI application protocol.

3.1.74 SCSI hard reset: A condition resulting from a power on condition or a reset event in which the SCSI device performs the hard reset operations described in SAM-4, SPC-3, and the appropriate command and transport standards.

3.1.75 SCSI initiator port: A SCSI initiator device object that acts as the connection between application clients and a service delivery subsystem through which requests and responses are routed (see SAM-4).

3.1.76 SCSI read command: A READ (6), READ (10), READ (12), or READ (16) command (see SBC-2).

3.1.77 SCSI synchronize cache command: A SYNCHRONIZE CACHE(10), or SYNCHRONIZE CACHE (16) command (see SBC-2).

3.1.78 SCSI target port: A SCSI target device object that contains a task router and acts as the connection between device servers and task managers and a service delivery subsystem through which requests and responses are routed (see SAM-4).

3.1.79 SCSI verify command: A VERIFY (10), VERIFY (12), or VERIFY (16) command (see SBC-2).

3.1.80 SCSI write command: A WRITE (6), WRITE (10), WRITE (12), or WRITE (16) command (see SBC-2).

3.1.81 SCSI write and verify command: A WRITE AND VERIFY (10), WRITE AND VERIFY (12), or WRITE AND VERIFY (16) command (see SBC-2).

3.1.82 Serial ATA (SATA): A serial transport protocol that serves as an ATA service delivery subsytem (see SATA-2.6).

3.1.83 Serial ATA Tunneled Protocol (STP): The protocol used by STP initiator ports to communicate with STP target ports in a SAS domain (see SAS-1.1)

3.1.84 Serial Attached SCSI (SAS): A set of protocols and the interconnect defined by SAS-1.1.

3.1.85 service delivery subsystem: That part of a SCSI I/O system that transmits service requests to a logical unit or SCSI target device and returns logical unit or SCSI target device responses to a SCSI initiator device (see SAM-4), or that part of an ATA I/O system that connects an ATA host port and one or more ATA/ATAPI device ports and is a single path for the transfer of requests and responses between a host and one or more devices (see ATA8-AAM).

3.1.86 service response: The device service response or SCSI transport protocol specific service response returned to an application client by the SATL on completion of a SCSI transport protocol service request (see SAM-4).

3.1.87 STP initiator port: A SAS initiator device object in a SAS domain that interfaces to a service delivery subsystem with STP (see SAS-1.1).

3.1.88 STP target port: A SAS target device object in a SAS domain that interfaces to a service delivery subsystem with STP (see SAS-1.1).

Page: 28

Number: 1 Author: Kevin_Marks Subject: Highlight Date: 8/8/2008 8:26:12 AM -07'00'

layer
s/b
Layer

Status
moverby Accepted 10/20/2008 11:05:10 AM -07'00'

Number: 2 Author: Kevin_Marks Subject: Highlight Date: 8/8/2008 8:26:00 AM -07'00'

layer

Status
moverby Rejected 10/20/2008 11:05:07 AM -07'00'

Number: 3 Author: Kevin_Marks Subject: Highlight Date: 8/8/2008 8:35:48 AM -07'00'

SPC-3
s/b
SPC-4

Status
moverby Accepted 11/3/2008 11:13:42 PM

Number: 4 Author: Kevin_Marks Subject: Cross-Out Date: 8/8/2008 8:35:13 AM -07'00'

Status
moverby Rejected 10/20/2008 11:05:31 AM -07'00'

Number: 5 Author: Kevin_Marks Subject: Highlight Date: 8/8/2008 8:36:13 AM -07'00'

(see SBC-2).
s/b
(see SBC-3).

Status
moverby Accepted 11/3/2008 11:13:46 PM

Number: 6 Author: Kevin_Marks Subject: Sticky Note Date: 8/8/2008 8:39:46 AM -07'00'

Should the 32 byte read, write and verify commands be added to the different definitions.

Status
moverby Rejected 9/9/2008 9:52:25 AM -07'00'

Author: moverby Subject: Sticky Note Date: 9/10/2008 1:42:13 PM -07'00'

As there are no translations or guidance for 32-byte commands, this was rejected

Number: 7 Author: Kevin_Marks Subject: Cross-Out Date: 8/8/2008 8:35:23 AM -07'00'

Status
moverby Accepted 10/20/2008 11:05:48 AM -07'00'

Number: 8 Author: Kevin_Marks Subject: Highlight Date: 8/8/2008 8:36:40 AM -07'00'

(see SBC-2).
s/b
(see SBC-3).

Status
moverby Accepted 11/3/2008 11:13:49 PM

Number: 9 Author: Kevin_Marks Subject: Cross-Out Date: 8/8/2008 8:38:02 AM -07'00'

Status
moverby Rejected 10/20/2008 11:08:07 AM -07'00'

Number: 10 Author: Kevin_Marks Subject: Highlight Date: 8/8/2008 8:37:09 AM -07'00'

(see SBC-2).
s/b
(see SBC-3).

Status
moverby Accepted 11/3/2008 11:13:52 PM

Number: 11 Author: Kevin_Marks Subject: Cross-Out Date: 8/8/2008 8:38:08 AM -07'00'

Status
moverby Rejected 10/20/2008 11:08:16 AM -07'00'

Number: 12 Author: Kevin_Marks Subject: Highlight Date: 8/19/2008 2:37:30 PM -07'00'

KEVIN MARKS Needs to update: 3.1.80 SCSI write command:

Does WRITE SAME(10) (16) need to be added here? or WRITE LONG?

Status
moverby Rejected 10/20/2008 11:10:40 AM -07'00'

Author: moverby Subject: Sticky Note Date: 10/20/2008 11:10:36 AM -07'00'

In the context of how we use this definition those appear to not be needed.

Number: 13 Author: Kevin_Marks Subject: Highlight Date: 8/8/2008 8:37:38 AM -07'00'

(see SBC-2).
s/b
(see SBC-3).

Status
moverby Accepted 11/3/2008 11:13:58 PM

Comments from page 28 continued on next page

3.1.71 SATA host: An ATA host that implements the Serial ATA transport protocol (see SATA-2.6).

3.1.72 SCSI / ATA Translation layer (SATL): The functional layer defined in this standard that uses an ATA device to emulate objects in a SCSI logical unit, including the device server, task manager, and task set (see SAM-4).

3.1.73 SCSI device: A device that contains one or more SCSI ports that are connected to a service delivery subsystem and supports a SCSI application protocol.

3.1.74 SCSI hard reset: A condition resulting from a power on condition or a reset event in which the SCSI device performs the hard reset operations described in SAM-4, SPC-3, and the appropriate command and transport standards.

3.1.75 SCSI initiator port: A SCSI initiator device object that acts as the connection between application clients and a service delivery subsystem through which requests and responses are routed (see SAM-4).

3.1.76 SCSI read command: A READ (6), READ (10), READ (12), or READ (16) command (see SBC-2).

3.1.77 SCSI synchronize cache command: A SYNCHRONIZE CACHE(10), or SYNCHRONIZE CACHE (16) command (see SBC-2).

3.1.78 SCSI target port: A SCSI target device object that contains a task router and acts as the connection between device servers and task managers and a service delivery subsystem through which requests and responses are routed (see SAM-4).

3.1.79 SCSI verify command: A VERIFY (10), VERIFY (12), or VERIFY (16) command (see SBC-2).

3.1.80 SCSI write command: A WRITE (6), WRITE (10), WRITE (12), or WRITE (16) command (see SBC-2).

3.1.81 SCSI write and verify command: A WRITE AND VERIFY (10), WRITE AND VERIFY (12), or WRITE AND VERIFY (16) command (see SBC-2).

3.1.82 Serial ATA (SATA): A serial transport protocol that serves as an ATA service delivery subsytem (see SATA-2.6).

3.1.83 Serial ATA Tunneled Protocol (STP): The protocol used by STP initiator ports to communicate with STP target ports in a SAS domain (see SAS-1.1)

3.1.84 Serial Attached SCSI (SAS): A set of protocols and the interconnect defined by SAS-1.1.

3.1.85 service delivery subsystem: That part of a SCSI I/O system that transmits service requests to a logical unit or SCSI target device and returns logical unit or SCSI target device responses to a SCSI initiator device (see SAM-4), or that part of an ATA I/O system that connects an ATA host port and one or more ATA/ATAPI device ports and is a single path for the transfer of requests and responses between a host and one or more devices (see ATA8-AAM).

3.1.86 service response: The device service response or SCSI transport protocol specific service response returned to an application client by the SATL on completion of a SCSI transport protocol service request (see SAM-4).

3.1.87 STP initiator port: A SAS initiator device object in a SAS domain that interfaces to a service delivery subsystem with STP (see SAS-1.1).

3.1.88 STP target port: A SAS target device object in a SAS domain that interfaces to a service delivery subsystem with STP (see SAS-1.1).

Number: 14 Author: LSI-Penokie Subject: Sticky Note Date: 8/19/2008 10:47:41 AM -07'00'

It appears that the READ (32), WRITE (32), VERIFY (32), WRITE AND VERIFY (32) are not here. Is that intentional or should they be added.

Status
moverby Rejected 9/9/2008 9:52:45 AM -07'00'

Author: moverby Subject: Sticky Note Date: 9/10/2008 1:42:30 PM -07'00'

Rejected because there are no translations for 32-byte commands.

Number: 15 Author: Kevin_Marks Subject: Cross-Out Date: 8/8/2008 8:38:14 AM -07'00'

Status
moverby Rejected 10/20/2008 11:10:46 AM -07'00'

Number: 16 Author: Kevin_Marks Subject: Highlight Date: 8/8/2008 8:37:51 AM -07'00'

(see SBC-2).
s/b
(see SBC-3).

Status
moverby Accepted 11/3/2008 11:14:01 PM

Number: 17 Author: HPQ-RElliott Subject: Highlight Date: 9/3/2008 9:42:24 AM -07'00'

subsytem
s/b
subsystem

Status
moverby Accepted 10/20/2008 11:10:55 AM -07'00'

Number: 18 Author: Kevin_Marks Subject: Highlight Date: 8/8/2008 8:42:09 AM -07'00'

(see SAS-1.1)
s/b
(see SAS-2)

Status
moverby Accepted 11/3/2008 11:14:04 PM

Number: 19 Author: Kevin_Marks Subject: Highlight Date: 8/8/2008 8:42:37 AM -07'00'

SAS-1.1.
s/b
SAS-2.

Status
moverby Accepted 11/3/2008 11:14:13 PM

Number: 20 Author: Kevin_Marks Subject: Cross-Out Date: 8/8/2008 8:44:05 AM -07'00'

Status
moverby Accepted 10/20/2008 11:11:08 AM -07'00'

Number: 21 Author: Kevin_Marks Subject: Highlight Date: 8/8/2008 8:46:42 AM -07'00'

(see SAS-1.1).
s/b
(see SAS-2).

Status
moverby Accepted 11/3/2008 11:14:18 PM

Number: 22 Author: Kevin_Marks Subject: Highlight Date: 8/8/2008 8:47:04 AM -07'00'

(see SAS-1.1).
s/b
(see SAS-2).

Status
moverby Accepted 11/3/2008 11:14:21 PM

3.1.89 STP/SATA bridge: An expander device object containing an STP target port, a SATA host port, and the functions required to forward information between the STP target port and SATA host port to enable STP initiator ports in a SAS domain to communicate with SATA devices in an ATA domain (see SAS-1.1).

3.1.90 task management function: A task manager service capable of being requested by an application client to affect the processing of one or more commands (see SAM-3).

3.1.91 task set: A group of commands within a device server whose interaction is dependent on the task management and auto-contingent allegiance rules (see SAM-4).

3.1.92 tagged command queuing (TCQ): A method that makes use of the ATA Tagged Command Queuing feature set, by which an ATA device may maintain and order the processing of up to 32 outstanding commands, identifying the context of each outstanding command with a unique tag (see ATA8-ACS).

3.1.93 Transport Protocol-Specific Information Unit (TPSIU): A transport-specific information unit used to transport information between initiator ports and target ports that may contain additional information needed by a service delivery subsystem to effect the requested information unit transfers (e.g., ~~the Command Block Wrapper defined in USB-BOT~~).

3.1.94 word: A sequence of two contiguous bytes considered as a unit.

3.2 Symbols and abbreviations

≠ or NE	not equal
≤ or LE	less than or equal to
±	plus or minus
≈	approximately
x	multiply
+	add
-	subtract
< or LT	less than
= or EQ	equal
> or GT	greater than
≥ or GE	greater than or equal to
ACA	auto-contingent allegiance (see 3.1.28)
APM	Advanced Power Management (see 3.1.2)
ATA	AT Attachment (see 3.1.5)
ATAPI	AT Attachment Packet Interface (see 3.1.5)
CDB	Command Descriptor Block (see 3.1.33)
FIS	Frame Information Structure (see SATA-2.6)
FUA	Force Unit Access
LBA	Logical Block Address (see 3.1.48)
LSB	Least significant bit (see 3.1.43)
LUN	Logical unit number (see 3.1.51)
MSB	Most significant bit (see 3.1.55)
n/a	not applicable
NCQ	Native command queuing (see 3.1.56)
PATA	Parallel ATA (see 3.1.60)
SAS	Serial Attached SCSI (see 3.1.84)
SAT	SCSI / ATA Translation
SATA	Serial ATA (see 3.1.82)
SATA 2.6	Serial ATA-2.6 specification (see 2.4)
SATL	SCSI / ATA Translation Layer (see 3.1.72)
SAM-2	SCSI Architecture Model-2 standard (see 2.2)
SAM-4	SCSI Architecture Model-4 standard (see 2.2)
SCSI	Small Computer System Interface family of standards
SCT	Smart Command Transport standard (see 2.3)

Number: 1 Author: Kevin_Marks Subject: Highlight Date: 8/8/2008 11:32:47 AM -07'00'
(see SAS-1.1).
s/b
see SAS-2).

Status
moverby Accepted 11/3/2008 11:14:26 PM

Number: 2 Author: HPQ-RElliott Subject: Highlight Date: 9/3/2008 9:42:24 AM -07'00'
(see SAM-3)
s/b
(see SAM-4)

and update the definition if needed

Status
moverby Accepted 11/3/2008 11:14:43 PM

Number: 3 Author: Kevin_Marks Subject: Highlight Date: 8/8/2008 11:32:57 AM -07'00'
(see SAM-3).
s/b
(see SAM-4).

Status
moverby Accepted 11/3/2008 11:14:30 PM

Number: 4 Author: LSI-Besmer Subject: Note Date: 8/26/2008 8:20:29 PM -07'00'
is TCQ obsolete?

Status
moverby Rejected 10/20/2008 11:11:29 AM -07'00'
Author: moverby Subject: Sticky Note Date: 10/20/2008 11:11:26 AM -07'00'
No - TCQ is not obsolete yet.

Number: 5 Author: moverby Subject: Replacement Text Date: 9/9/2008 3:15:59 PM -07'00'
the Command Block Wrapper defined in USB-BOT (see 2.4)).

Status
moverby Rejected 10/20/2008 11:11:36 AM -07'00'

Number: 6 Author: LSI-Besmer Subject: Note Date: 8/26/2008 8:19:33 PM -07'00'
no definition for "dword"

From SAS-2:

dword: A sequence of four contiguous bytes or four contiguous characters considered as a unit. The meaning depends on the context (e.g., when discussing the bits being transmitted over a physical link, dword represents four characters (i.e., 40 bits). When discussing the contents of a frame before 8b10b encoding (see 3.1.2) or after 10b8b decoding (see 3.1.3), dword represents four bytes (i.e., 32 bits)).

Status
moverby Accepted 10/20/2008 11:12:06 AM -07'00'
Author: moverby Subject: Sticky Note Date: 10/20/2008 11:12:03 AM -07'00'
Will require some changes to this definition.

Number: 7 Author: ENDL Texas Subject: Highlight Date: 9/2/2008 8:26:38 AM -07'00'
Global
Since - is specified to mean subtraction, it should not be used when ranges of values are specified (e.g., 1 - 3 in table 8). Instead the ISO preferred " to " should be used.

Status
moverby Accepted 10/20/2008 11:12:14 AM -07'00'

Number: 8 Author: HPQ-RElliott Subject: Note Date: 9/3/2008 9:42:24 AM -07'00'
The (see 3.1.5) cross references don't seem to work in the PDF file

Status
moverby Accepted 10/20/2008 11:12:26 AM -07'00'

Number: 9 Author: HPQ-RElliott Subject: Highlight Date: 9/3/2008 9:42:24 AM -07'00'
Force Unit Access
s/b
lowercase

Status
moverby Accepted 10/20/2008 11:12:34 AM -07'00'

Number: 10 Author: HPQ-RElliott Subject: Highlight Date: 9/3/2008 9:42:24 AM -07'00'
Least
s/b
lowercase

Status
moverby Accepted 10/20/2008 11:12:40 AM -07'00'

Number: 11 Author: HPQ-RElliott Subject: Highlight Date: 9/3/2008 9:42:24 AM -07'00'
Logical
s/b
lowercase

Status
moverby Accepted 10/20/2008 11:13:09 AM -07'00'

Number: 12 Author: HPQ-RElliott Subject: Highlight Date: 9/3/2008 9:42:24 AM -07'00'
Most

Comments from page 29 continued on next page

3.1.89 STP/SATA bridge: An expander device object containing an STP target port, a SATA host port, and the functions required to forward information between the STP target port and SATA host port to enable STP initiator ports in a SAS domain to communicate with SATA devices in an ATA domain (see SAS-1.1).

3.1.90 task management function: A task manager service capable of being requested by an application client to affect the processing of one or more commands (see SAM-3).

3.1.91 task set: A group of commands within a device server whose interaction is dependent on the task management and auto-contingent allegiance rules (see SAM-4).

3.1.92 tagged command queuing (TCQ): A method that makes use of the ATA Tagged Command Queuing feature set, by which an ATA device may maintain and order the processing of up to 32 outstanding commands, identifying the context of each outstanding command with a unique tag (see ATA8-ACS).

3.1.93 Transport Protocol-Specific Information Unit (TPSIU): A transport-specific information unit used to transport information between initiator ports and target ports that may contain additional information needed by a service delivery subsystem to effect the requested information unit transfers (e.g., ~~the Command Block Wrapper defined in USB-BOT~~).

3.1.94 word: A sequence of two contiguous bytes considered as a unit.

3.2 Symbols and abbreviations

≠ or NE	not equal
≤ or LE	less than or equal to
±	plus or minus
≈	approximately
x	multiply
+	add
-	subtract
< or LT	less than
= or EQ	equal
> or GT	greater than
≥ or GE	greater than or equal to
ACA	auto-contingent allegiance (see 3.1.28)
APM	Advanced Power Management (see 3.1.2)
ATA	AT Attachment (see 3.1.5)
ATAPI	AT Attachment Packet Interface (see 3.1.5)
CDB	Command Descriptor Block (see 3.1.33)
FIS	Frame Information Structure (see SATA-2.6)
FUA	Force Unit Access
LBA	Logical Block Address (see 3.1.48)
LSB	Least significant bit (see 3.1.43)
LUN	Logical unit number (see 3.1.51)
MSB	Most significant bit (see 3.1.55)
n/a	not applicable
NCQ	Native command queuing (see 3.1.56)
PATA	Parallel ATA (see 3.1.60)
SAS	Serial Attached SCSI (see 3.1.84)
SAT	SCSI / ATA Translation
SATA	Serial ATA (see 3.1.82)
SATA 2.6	Serial ATA-2.6 specification (see 2.4)
SATL	SCSI / ATA Translation Layer (see 3.1.72)
SAM-2	SCSI Architecture Model-2 standard (see 2.2)
SAM-4	SCSI Architecture Model-4 standard (see 2.2)
SCSI	Small Computer System Interface family of standards
SCT	Smart Command Transport standard (see 2.3)

s/b
lowercase

Status
moverby Accepted 10/20/2008 11:13:13 AM -07'00'

Number: 13 Author: HPQ-RElliott Subject: Highlight Date: 9/3/2008 9:42:24 AM -07'00'

Native command queuing
s/b
mixed case

Status
moverby Accepted 10/20/2008 11:13:20 AM -07'00'

Number: 14 Author: HPQ-RElliott Subject: Note Date: 9/3/2008 9:42:24 AM -07'00'

3.1.60 cross reference seems broken in the PDF file

Status
moverby Accepted 10/20/2008 11:13:24 AM -07'00'

Number: 15 Author: LSI-Penokie Subject: Sticky Note Date: 8/19/2008 10:23:30 AM -07'00'

The abbreviations list needs to be scrubbed as the list of standards is not consistent with the normative references.

Status
moverby Accepted 10/20/2008 11:13:33 AM -07'00'

Number: 16 Author: HPQ-RElliott Subject: Note Date: 9/3/2008 9:42:24 AM -07'00'

3.1.72 cross reference doesn't seem to work in the PDF file

Status
moverby Accepted 10/20/2008 11:13:47 AM -07'00'

Number: 17 Author: HPQ-RElliott Subject: Highlight Date: 9/3/2008 9:42:24 AM -07'00'

(see 2.2) should be (see 2.3), since SAM-4 is still "under development" at the ISO level

Status
moverby Rejected 10/20/2008 3:01:46 PM -07'00'

Author: moverby Subject: Sticky Note Date: 10/20/2008 3:01:42 PM -07'00'

This is correct for INCITS processing.

Status
moverby Rejected 10/20/2008 3:01:46 PM -07'00'

Number: 18 Author: HPQ-RElliott Subject: Highlight Date: 9/3/2008 9:42:24 AM -07'00'

(see 2.3)

Nothing in 2.3 refers to an "SCT" standard.

Status
moverby Accepted 11/3/2008 4:52:40 PM

Author: moverby Subject: Sticky Note Date: 11/3/2008 4:52:37 PM

Deleted the word standard and replace cross-reference with ATA8-ACS

Number: 19 Author: Kevin_Marks Subject: Highlight Date: 8/8/2008 11:35:00 AM -07'00'

(see 2.3)

I'm not sure how this reference helps.

Status
moverby Accepted 11/3/2008 4:53:06 PM

Author: moverby Subject: Sticky Note Date: 11/3/2008 4:53:03 PM

Changed reference to ATA8-ACS and deleted the word standard.

Number: 20 Author: moverby Subject: Sticky Note Date: 10/20/2008 11:17:04 AM -07'00'

SCT is not a standard

Status
moverby Accepted 10/20/2008 11:17:12 AM -07'00'

SPC-3	SCSI Primary Commands-3 standard (see 2.2)
STP	Serial ATA Tunneled Protocol (see 3.1.83)
SW	software
TCQ	tagged command queuing (see 3.1.92)
TPSIU	Transport Protocol-Specific Information Unit (see 3.1.93)
VPD	Vital Product Data (see SPC-3)

3.3 Keywords

3.3.1 expected: A keyword used to describe the behavior of the hardware or software in the design models assumed by this standard. Other hardware and software design models may also be implemented.

3.3.2 invalid: A keyword used to describe an illegal or unsupported bit, byte, word, field or code value. Receipt of an invalid bit, byte, word, field or code value shall be reported as an error.

3.3.3 mandatory: A keyword indicating an item that is required to be implemented as defined in this standard.

3.3.4 may: A keyword that indicates flexibility of choice with no implied preference.

3.3.5 may not: Keywords that indicates flexibility of choice with no implied preference.

3.3.6 obsolete: A keyword indicating that an item was defined in a previous version of a standard but has been removed from the most recent version of that standard.

3.3.7 optional: A keyword that describes features that are not required to be implemented by this standard. However, if any optional feature defined by this standards is implemented, it shall be implemented as defined in this standard.

3.3.8 reserved: A keyword referring to bits, bytes, words, fields and code values that are set aside for future standardization. Their use and interpretation may be specified by future extensions to this or other standards. A reserved bit, byte, word or field shall be set to zero, or in accordance with a future extension to this standard. Recipients are not required to check reserved bits, bytes, words or fields for zero values. Receipt of reserved code values in defined fields shall be reported as an error.

3.3.9 shall: A keyword indicating a mandatory requirement (equivalent to “is required”). Designers are required to implement all such requirements to ensure interoperability with other products that conform to this standard.

3.3.10 should: A keyword indicating flexibility of choice with a preferred alternative (equivalent to “it is strongly recommended”).

3.3.11 vendor specific: A keyword indicating specification of the referenced item is determined by the SCSI device vendor.

3.4 SAT specific terminology

3.4.1 emulated: A term designating that the SATL is required to implement functions in addition to or in place of functions supported by an ATA device to provide a defined SCSI capability.

3.4.2 unspecified: A term designating that this version of this standard does not specify a translation for a SCSI field. A translation for an unspecified field may be specified by future versions of this standard. Translation of fields marked unspecified shall not conflict with other standards in the set of SCSI standards.

Page: 30

Number: 1 Author: Kevin_Marks Subject: Highlight Date: 8/8/2008 11:37:16 AM -07'00'

SPC-3 SCSI Primary Commands-3 standard (see 2.2)
s/b
SPC-4 SCSI Primary Commands-4 standard (see 2.3)

Why is SBC-3 not included?

Status
moverby Accepted 11/3/2008 11:14:56 PM
Author: moverby Subject: Sticky Note Date: 11/3/2008 11:14:54 PM
Add SBC-3

Number: 2 Author: HPQ-RElliott Subject: Highlight Date: 9/3/2008 9:42:24 AM -07'00'

Tagged command queuing
s/b
mixed case

Status
moverby Accepted 10/20/2008 11:17:30 AM -07'00'

Number: 3 Author: HPQ-RElliott Subject: Highlight Date: 9/3/2008 9:42:24 AM -07'00'

Vital Product Data
s/b
lowercase

Status
moverby Accepted 10/20/2008 1:20:01 PM -07'00'

Number: 4 Author: LSI-Penokie Subject: Highlight Date: 8/19/2008 11:05:06 AM -07'00'

<< expected >> is not defined a SCSI keyword and should not be in this list.

Status
moverby Accepted 10/20/2008 2:50:47 PM -07'00'

Number: 5 Author: LSI-Penokie Subject: Highlight Date: 9/10/2008 1:42:44 PM -07'00'

This section should be removed and the two entries should be moved to the definitions section.

Status
moverby Rejected 9/9/2008 10:46:23 AM -07'00'
Author: moverby Subject: Sticky Note Date: 9/10/2008 1:42:54 PM -07'00'
Rejected: As discussed in WG this is needed and appropriate (Curtis Stevens moved, Kevin Marks seconding, that this letter ballot comment be rejected. 8 were in favor, 1 opposed, 3 abstain)

3.5 Conventions

3.5.1 Overview

Certain words and terms used in this standard have a specific meaning beyond the normal English meaning. These words and terms are defined either in 3.1 or in the text where they first appear. Names of commands, statuses, sense keys, and additional sense codes are in all uppercase (e.g., REQUEST SENSE). Lowercase is used for words having the normal English meaning.

If there is more than one CDB length for a particular command (e.g., MODE SENSE (6) and MODE SENSE (10)) and the name of the command is used in a sentence without any CDB length descriptor (e.g., MODE SENSE), then the condition specified in the sentence applies to all CDB lengths for that command.

The names of fields are in small uppercase (e.g., ALLOCATION LENGTH). When a field name is a concatenation of acronyms, uppercase letter may be used for readability (e.g., NORMACA). Normal case is used when the contents of a field are being discussed. Fields containing only one bit are usually referred to as the NAME bit instead of the NAME field.

If a conflict arises between text, tables, or figures, the order of precedence to resolve the conflicts is text; then tables; and finally figures. Not all tables or figures are fully described in the text. Tables show data format and values. Notes do not constitute any requirements for implementors.

3.5.2 Numeric conventions

A binary number is represented in this standard by any sequence of digits consisting of only the Western-Arabic numerals 0 and 1 immediately followed by a lower-case b (e.g., 0101b). Underscores or spaces may be included in binary number representations to increase readability or delineate field boundaries (e.g., 0 0101 1010b or 0_0101_1010b).

A hexadecimal number is represented in this standard by any sequence of digits consisting of only the Western-Arabic numerals 0 through 9 and/or the upper-case English letters A through F immediately followed by a lower-case h (e.g., FA23h). Underscores or spaces may be included in hexadecimal number representations to increase readability or delineate field boundaries (e.g., B FD8C FA23h or B_FD8C_FA23h).

A decimal number is represented in this standard by any sequence of digits consisting of only the Western-Arabic numerals 0 through 9 not immediately followed by a lower-case b or lower-case h (e.g., 25).

When the value of the bit or field is not relevant, x or xx appears in place of a specific value.

This standard uses the following convention for representing decimal numbers:

a) the decimal separator (i.e., separating the integer and fractional portions of the number) is a period;
b) the thousands separator (i.e., separating groups of three digits in the portion of a number) is a space; and
c) the thousands separator is used in both the integer and fractional portion of a number.

Table 1 shows some examples of decimal numbers using various conventions.

Table 1 — Numbering Conventions

French	English	This Standard
0,6	0.6	0.6
3,141 592 65	3.14159265	3.141 592 65
1 000	1,000	1 000
1 323 462,95	1,323,462.95	1 323 462.95

Lists sequenced by letters (e.g., a-red, b-blue, c-green) show no ordering relationship between the listed items. Numbered lists (e.g., 1-red, 2-blue, 3-green) show an ordering relationship between the listed items.

Page: 31

Number: 1 Author: LSI-Besmer Subject: Note Date: 8/26/2008 8:14:35 PM -07'00'

This text (from sas-2) should be added to this specification:

In the event of conflicting information the precedence for requirements defined in this standard is:
1) text;
2) tables; and
3) figures.
Notes do not constitute any requirements for implementers.

Status
moverby Accepted 10/20/2008 11:19:36 AM -07'00'

3.5.3 Bit and byte ordering

In this standard, data structures may be defined by a table. A table defines a complete ordering of elements (i.e., bits, bytes, fields, and dwords) within the structure. The ordering of elements within a table does not in itself constrain the order of storage or transmission of the data structure, but in combination with other normative text in this standard, may constrain the order of storage or transmission of the structure.

In a table, any element that is presented in a row above another element in a lower row is more significant than the lower element, and any element presented to the left of another element in the same row is more significant than the element to the right.

If a table shows bit numbering (see table 2), the least significant bit (LSB) is numbered 0 and each more significant bit has the next greater number than the immediately less significant bit. If a table shows numbering of bytes or characters (see table 3), the most significant byte or character is represented at the lowest number and each less significant byte or character has the next greater number than the immediately more significant byte.

In a field in a table consisting of more than one bit that contains a single value (e.g., a number), the least significant bit (LSB) is shown on the right and the most significant bit (MSB) is shown on the left (e.g., in a byte, bit 7 is the MSB and is shown on the left, bit 0 is the LSB and is shown on the right). The MSB and LSB are not labeled if the field consists of eight or fewer bits. The MSB and LSB are labeled if the field consists of more than eight bits and has no internal structure defined.

In a field in a table consisting of more than one byte that contains multiple fields each with their own values (e.g., a descriptor), there is no MSB and LSB of the field itself and thus there are no MSB and LSB labels. Each individual field has an MSB and LSB, but they are not labeled.

In a field containing a text string (e.g., ASCII or UTF-8), only the MSB of the first character and the LSB of the last character are labeled.

Multiple byte fields are represented with only two rows, with the non-sequentially increasing byte number denoting the presence of additional bytes.

A data dword consists of 32 bits. Table 2 shows a data dword containing a single value, where the MSB is on the upper left in bit 31 and the LSB is on the lower right in bit 0.

Table 2 — Example of ordering of bits and bytes within a multi-byte element

Bit / Byte	7	6	5	4	3	2	1	0
0	(MSB) Bit 31	Bit 30	Bit 29	Bit 28	Bit 27	Bit 26	Bit 25	Bit 24
1	Bit 23	Bit 22	Bit 21	Bit 20	Bit 19	Bit 18	Bit 17	Bit 16
2	Bit 15	Bit 14	Bit 13	Bit 12	Bit 11	Bit 10	Bit 9	Bit 8
3	Bit 7	Bit 6	Bit 5	Bit 4	Bit 3	Bit 2	Bit 1	Bit 0 (LSB)

Page: 32

Number: 1 Author: HPQ-RElliott Subject: Underline Date: 9/3/2008 9:42:24 AM -07'00'

(global)

Change every usage of "if"" to include a "then". This helps separate the conditions from the resulting actions, which is helpful when there are compound conditions or actions.

If <condition>, then <result>

Status
moverby Accepted 10/20/2008 1:20:17 PM -07'00'

Number: 2 Author: HPQ-RElliott Subject: Note Date: 9/3/2008 9:42:24 AM -07'00'

Delete whitespace above table 2

Status
moverby Accepted 10/20/2008 11:20:44 AM -07'00'

Number: 3 Author: Kevin_Marks Subject: Sticky Note Date: 8/8/2008 11:40:06 AM -07'00'

Table 2 - missing line indents between bytes 0 & 1 and 2&3.

Status
moverby Accepted 10/20/2008 2:52:29 PM -07'00'

Author: moverby Subject: Sticky Note Date: 10/20/2008 2:52:26 PM -07'00'

Add cell border to bottom on each row (left and right)

Table 3 shows a data dword containing four one-byte fields, where byte 0 (the first byte) is on the left and byte 3 (the fourth byte) is on the right. Each byte has an MSB on the left and an LSB on the right.

Table 3 — Example of ordering of bits and bytes within a multiple element

Bit / Byte	7	6	5	4	3	2	1	0
0	First byte							
	Bit 7 (MSB)	Bit 6	Bit 5	Bit 4	Bit 3	Bit 2	Bit 1	Bit 0 (LSB)
1	Second byte							
	Bit 7 (MSB)	Bit 6	Bit 5	Bit 4	Bit 3	Bit 2	Bit 1	Bit 0 (LSB)
2	Third byte							
	Bit 7 (MSB)	Bit 6	Bit 5	Bit 4	Bit 3	Bit 2	Bit 1	Bit 0 (LSB)
3	Fourth byte							
	Bit 7 (MSB)	Bit 6	Bit 5	Bit 4	Bit 3	Bit 2	Bit 1	Bit 0 (LSB)

3.5.4 Notation for byte encoded character strings

When this standard requires one or more bytes to contain specific encoded character, the specific characters are enclosed in single quotation marks. The single quotation marks identify the start and end of the characters that are required to be encoded but are not themselves to encoded. The characters that are to be encoded are shown in exactly the case that is to be encoded.

An ASCII space character (i.e., 20h) may be represented in a string by the character '¬' (e.g., 'SCSI¬device').

The encoded characters and the single quotation marks that enclose them are preceded by text that specifies the character encoding methodology and the number of characters required to be encoded.

The encoded characters and the single quotation marks that enclose them are preceded by text that specifies the character encoding methodology and the number of characters required to be encoded.

EXAMPLE - Using the notation described in this subclause, stating that eleven ASCII characters 'SCSI device' are to be encoded would be the same writing out the following sequence of byte values: 53h 43h 53h 49h 20h 64h 65h 76h 69h 63h 65h.

3.5.5 Notation for command descriptions

3.5.5.1 Description

The description of each command begins with a subclause describing the general method applied in translating the SCSI command to the corresponding ATA command(s), as well as any constraints and special considerations that may apply to the translation applied.

The subclause describing the general translation method for each command contains a table formatted like table 4 with two columns as follows:

a) the first column lists each of the fields in the SCSI CDB (see SPC-3 and SBC-2); and
b) the second column is either a brief description of the corresponding ATA features and functions used to implement the identified SCSI field, or a reference to a subsequent subclause containing a more lengthy description of the method of emulation or implementation.

Page: 33

Number: 1 Author: HPQ-RElliott Subject: Note Date: 9/3/2008 9:42:24 AM -07'00'

Delete whitespace above table 3

Status
moverby Accepted 10/20/2008 11:21:58 AM -07'00'

Number: 2 Author: HPQ-RElliott Subject: Note Date: 9/3/2008 9:42:24 AM -07'00'

Delete whitespace after table 3

Status
moverby Accepted 10/20/2008 1:20:32 PM -07'00'

Number: 3 Author: Kevin_Marks Subject: Highlight Date: 8/8/2008 11:42:12 AM -07'00'

(see SPC-3 and SBC-2);
s/b
(see SPC-4 and SBC-3);

Status
moverby Accepted 11/3/2008 11:15:00 PM

Table 4 — Format for translated command field descriptions

Field	Description or reference
IMPLEMENTED OR EMULATED FIELD	A brief identification of the corresponding ATA features and functions, or a paragraph reference if there are special considerations that need to be applied in the use of the corresponding ATA features and functions that require a separate paragraph of description.
SUMMARY EMULATED FIELD	Summary field with more detailed structure.
UNSPECIFIED FIELD	Unspecified (see 3.4.2)

Tables listing fields in mode pages have an additional column that defines whether the field is changeable or not.

3.5.6 Use of field names defined in ATA standards and specifications

This standard discusses fields and values defined in other standards and specifications, in particular the ATA8-APT, ATA8-ACS, ATA8-AAM, and SCT standards developed by T13, and the SATA-2.6 specification. Such fields and values discussed in this standard are shown using the same notation conventions used in the standards where those fields and values are defined.

When this standard uses terms defined in T13 ATA standards or the SATA-2.6 specification, the following conventions apply:

a) The names of abbreviations, commands, and acronyms used as signal names are in all uppercase (e.g., IDENTIFY DEVICE). Fields containing only one bit are usually referred to as the “name” bit instead of the “name” field;
b) Names of device registers, fields in data structures, and other defined terms begin with an upper-case letter (e.g., LBA Mid register) and may be represented in mixed-case (e.g. PhyRdy);
c) The expression “word n” or “bit n” shall be interpreted as indicating the content of word n or bit n;
d) Bit names are shown in all uppercase letters; and
e) Bit (n:m) denotes a set of bits, for example, bits (7:0).

Page: 34

Number: 1 Author: HPQ-RElliott Subject: Highlight Date: 9/3/2008 9:42:24 AM -07'00'

LBA Mid register

"register" terminology no longer exists in ATA8-ACS, and LBA is now just LBA (47:0), not Low/Mid/High, so this is not a good example any more.

Status

moverby Accepted 10/20/2008 11:22:33 AM -07'00'

Author: moverby Subject: Sticky Note Date: 10/20/2008 11:22:31 AM -07'00'

Will replace with LBA field.

4 General

This standard defines a translation layer (i.e., the SATL) that provides a method for a SCSI application layer (see SAM-4) to access Serial ATA or Parallel ATA devices by representing ATA devices as SCSI direct-access block devices.

Implementations of SCSI / ATA Translation may provide varying levels of SCSI functionality.

> EXAMPLE 1 - The SATL may provide a level of SCSI emulation that is indistinguishable from native SCSI devices in terms of reported capabilities. Such SATL implementations need little guidance from this standard to effect interoperability since other SCSI protocol standards define all that is required to establish interoperability.
>
> EXAMPLE 2 - A SCSI / ATA Translation implementation may implement a subset of SCSI, have limited or no capability to maintain persistent information about the characteristics or state of the emulated SCSI device, have limited capability to manage device state information that carries forward from one command to the next, and maintain little or no capability to coordinate between multiple commands outstanding at a time. The characteristics and behavior of the underlying ATA devices in these minimal implementations of the SATL are expected to be more visible to the SCSI application clients.

This standard provides a set of definitions, conventions, and guidelines for:

a) the consistent reporting by the SATL of capabilities of emulated SCSI devices; and
b) the consistent identification of the attached devices by the application clients.

These provisions allow application clients to observe consistent behavior whether or not the application clients recognize the presence of a SATL in a system.

By defining expected behavior in terms of the SCSI commands sent, corresponding activity in the ATA domain, and expected SCSI responses based on the results of activity in the ATA domain, this standard eliminates:

a) incompatibility between legacy SCSI / ATA Translation implementations; and
b) SCSI application client / device interdependence.

This standard refers to behaviors for SCSI devices defined in SBC-3 and SPC-3. Unless otherwise specified, any behaviors that are optional in SBC-3 or SPC-3 are optional for devices implementing SCSI / ATA Translation. Any optional behaviors referred to in this standard and implemented by the SATL shall be implemented as described in this standard.

If the SATL receives a SCSI request specifying any value in any field of the CDB that the SATL does not support, unless otherwise specified in the description of the command, the SATL shall terminate the command with CHECK CONDITION status with the sense key set to ILLEGAL REQUEST and the additional sense code set to INVALID FIELD IN CDB (see SPC-3).

If the SATL receives a SCSI request specifying any value in any field of the parameter data that the SATL does not support, unless otherwise specified in the description of the parameter, the SATL shall terminate the command with CHECK CONDITION status with the sense key set to ILLEGAL REQUEST and the additional sense code set to INVALID FIELD IN PARAMETER LIST (see SPC-3).

Page: 35

Number: 1 Author: HPQ-RElliott Subject: Highlight Date: 9/3/2008 9:42:24 AM -07'00'
translation layer
s/b
SCSI/ATA translation layer

Status
moverby Accepted 10/20/2008 11:22:40 AM -07'00'

Number: 2 Author: HPQ-RElliott Subject: Highlight Date: 9/3/2008 9:42:24 AM -07'00'
Serial ATA or Parallel ATA devices by representing ATA devices as SCSI direct-access block devices

s/b
ATA or ATAPI devices by representing them as SCSI peripheral devices.

since there is an ATAPI annex now.

Status
moverby Accepted 10/20/2008 1:20:42 PM -07'00'

Number: 3 Author: Kevin_Marks Subject: Highlight Date: 8/11/2008 11:26:00 AM -07'00'
A SCSI / ATA Translation implementation
s/b
The SATL

to match 1st expample

Status
moverby Accepted 10/20/2008 1:20:50 PM -07'00'

Number: 4 Author: Kevin_Marks Subject: Highlight Date: 8/11/2008 11:28:00 AM -07'00'
sent,
s/b
received,

Status
moverby Accepted 10/20/2008 1:21:06 PM -07'00'

Number: 5 Author: HPQ-RElliott Subject: Highlight Date: 9/3/2008 9:42:24 AM -07'00'
this is not good material for a list; merge back into the sentence.

Status
moverby Rejected 10/20/2008 11:23:09 AM -07'00'
Author: moverby Subject: Sticky Note Date: 10/20/2008 11:23:05 AM -07'00'
There were previous comments to break this into a list.

Number: 6 Author: HPQ-RElliott Subject: Highlight Date: 9/3/2008 9:42:24 AM -07'00'
device
s/b
<not sure: maybe:>

device server
ATA device or ATAPI device

Status
moverby Accepted 10/20/2008 11:23:35 AM -07'00'
Author: moverby Subject: Sticky Note Date: 10/20/2008 11:23:32 AM -07'00'
ATA or ATAPI device

Number: 7 Author: Kevin_Marks Subject: Highlight Date: 8/11/2008 11:28:55 AM -07'00'
SPC-3.
s/b
SPC-4,

Status
moverby Accepted 11/3/2008 11:15:04 PM

Number: 8 Author: Kevin_Marks Subject: Highlight Date: 8/11/2008 11:29:08 AM -07'00'
SPC-3
s/b
SPC-4

Status
moverby Accepted 11/3/2008 11:15:08 PM

Number: 9 Author: HPQ-RElliott Subject: Highlight Date: 9/3/2008 9:42:24 AM -07'00'
oterwise
s/b
otherwise

Status
moverby Accepted 10/20/2008 11:23:41 AM -07'00'

Number: 10 Author: Kevin_Marks Subject: Highlight Date: 8/11/2008 11:29:43 AM -07'00'
SPC-3
s/b
SPC-4

Status
moverby Accepted 11/3/2008 11:15:11 PM

Number: 11 Author: LSI-Besmer Subject: Note Date: 8/26/2008 8:27:31 PM -07'00'
oterwise

Comments from page 35 continued on next page

4 General

This standard defines a translation layer (i.e., the SATL) that provides a method for a SCSI application layer (see SAM-4) to access Serial ATA or Parallel ATA devices by representing ATA devices as SCSI direct-access block devices.

Implementations of SCSI / ATA Translation may provide varying levels of SCSI functionality.

> EXAMPLE 1 - The SATL may provide a level of SCSI emulation that is indistinguishable from native SCSI devices in terms of reported capabilities. Such SATL implementations need little guidance from this standard to effect interoperability since other SCSI protocol standards define all that is required to establish interoperability.

> EXAMPLE 2 - A SCSI / ATA Translation implementation may implement a subset of SCSI, have limited or no capability to maintain persistent information about the characteristics or state of the emulated SCSI device, have limited capability to manage device state information that carries forward from one command to the next, and maintain little or no capability to coordinate between multiple commands outstanding at a time. The characteristics and behavior of the underlying ATA devices in these minimal implementations of the SATL are expected to be more visible to the SCSI application clients.

This standard provides a set of definitions, conventions, and guidelines for:

a) the consistent reporting by the SATL of capabilities of emulated SCSI devices; and
b) the consistent identification of the attached devices by the application clients.

These provisions allow application clients to observe consistent behavior whether or not the application clients recognize the presence of a SATL in a system.

By defining expected behavior in terms of the SCSI commands sent, corresponding activity in the ATA domain, and expected SCSI responses based on the results of activity in the ATA domain, this standard eliminates:

a) incompatibility between legacy SCSI / ATA Translation implementations; and
b) SCSI application client /device interdependence.

This standard refers to behaviors for SCSI devices defined in SBC-3 and SPC-3. Unless otherwise specified, any behaviors that are optional in SBC-3 or SPC-3 are optional for devices implementing SCSI / ATA Translation. Any optional behaviors referred to in this standard and implemented by the SATL shall be implemented as described in this standard.

If the SATL receives a SCSI request specifying any value in any field of the CDB that the SATL does not support, unless oterwise specified in the description of the command, the SATL shall terminate the command with CHECK CONDITION status with the sense key set to ILLEGAL REQUEST and the additional sense code set to INVALID FIELD IN CDB (see SPC-3).

If the SATL receives a SCSI request specifying any value in any field of the parameter data that the SATL does not support, unless oterwise specified in the description of the parameter, the SATL shall terminate the command with CHECK CONDITION status with the sense key set to ILLEGAL REQUEST and the additional sense code set to INVALID FIELD IN PARAMETER LIST (see SPC-3).

s/b
otherwise

Status
moverby Accepted 10/20/2008 11:23:46 AM -07'00'

Number: 12 Author: HPQ-RElliott Subject: Highlight Date: 9/3/2008 9:42:24 AM -07'00'

oterwise
s/b
otherwise

Status
moverby Accepted 10/20/2008 11:23:50 AM -07'00'

Number: 13 Author: Kevin_Marks Subject: Highlight Date: 8/11/2008 11:30:27 AM -07'00'

(see SPC-3).
s/b
(see SPC-4).

Status
moverby Accepted 11/3/2008 11:15:14 PM

5 SCSI architecture

5.1 Overview

This clause defines SCSI / ATA translation of features and functions that impact the representation of the domains defined in SAM-4 and ATA8-AAM. Figure 4 shows a SATL providing a communication path between a SCSI application client and an ATA device.

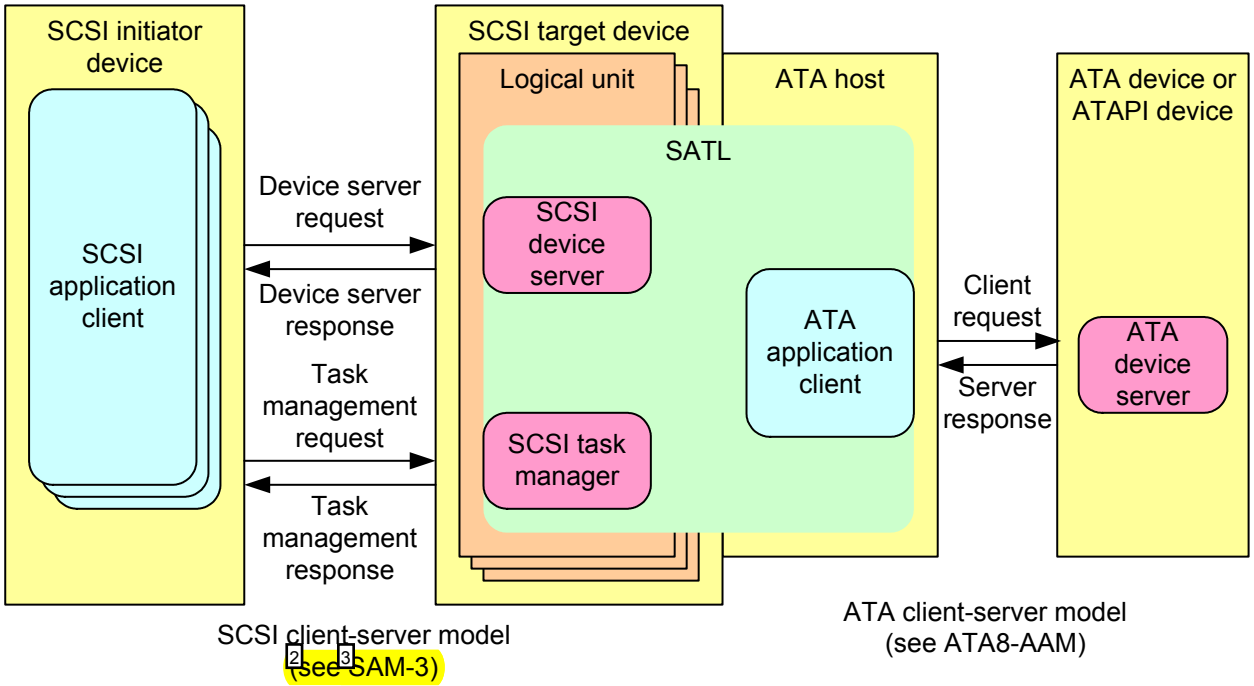

Figure 4 — Example of a SATL between a SCSI application client and an ATA or ATAPI device

The SATL provides the communication path between a SCSI application client and an ATA device or ATAPI device by:

a) emulating a SCSI logical unit;
b) integrating an ATA host; and
c) providing the translation that links them together.

This standard defines SCSI / ATA translation using SCSI and ATA command sets. This standard does not define the mapping of transport capabilities as defined at the SCSI transport protocol layer and the ATA protocol interconnect layer.

An implementation utilizing a SATL may include a SCSI transport. A SATL may appear in different configurations:

~~EXAMPLE 1 -~~ Figure 5 shows a SATL contained within a SCSI to ATA protocol bridge, where the ATA device is being accessed by an ATA host port, and the SATL is being accessed with a SCSI target port using a SCSI transport protocol ~~(e.g, FCP-3 over Fibre Channel).~~

Page: 36

Number: 1 Author: HPQ-RElliott Subject: Highlight Date: 9/3/2008 9:42:24 AM -07'00'

ATA device
s/b
ATA device or ATAPI device

since "ATA device" is narrowly defined as General feature set only, not a term for all devices defined by the ATA standards

Status
moverby Accepted 9/9/2008 9:57:19 AM -07'00'

Number: 2 Author: HPQ-RElliott Subject: Highlight Date: 9/3/2008 9:42:24 AM -07'00'

(see SAM-3)
s/b
(see SAM-4)

Status
moverby Accepted 11/3/2008 11:15:31 PM

Number: 3 Author: Kevin_Marks Subject: Highlight Date: 8/11/2008 11:32:30 AM -07'00'

SAM-3)
s/b
SAM-4)

Status
moverby Accepted 11/3/2008 11:15:26 PM

Number: 4 Author: HPQ-RElliott Subject: Cross-Out Date: 9/3/2008 9:42:24 AM -07'00'

EXAMPLE 1 -

Change these 3 "EXAMPLEs" back into standard paragraphs.

Status
moverby Rejected 10/20/2008 2:58:49 PM -07'00'

Author: moverby Subject: Sticky Note Date: 10/20/2008 2:58:45 PM -07'00'

Rejected - was discussed and there was not a need seen to make the change.

Number: 5 Author: HPQ-RElliott Subject: Highlight Date: 9/3/2008 9:42:24 AM -07'00'

ATA device
s/b
ATA device or ATAPI device

since "ATA device" is narrowly defined as General feature set only, not a term for all devices defined by the ATA standards

Status
moverby Accepted 10/20/2008 11:24:27 AM -07'00'

Number: 6 Author: moverby Subject: Cross-Out Date: 9/9/2008 9:39:31 AM -07'00'

Status
moverby Accepted 9/9/2008 9:58:13 AM -07'00'

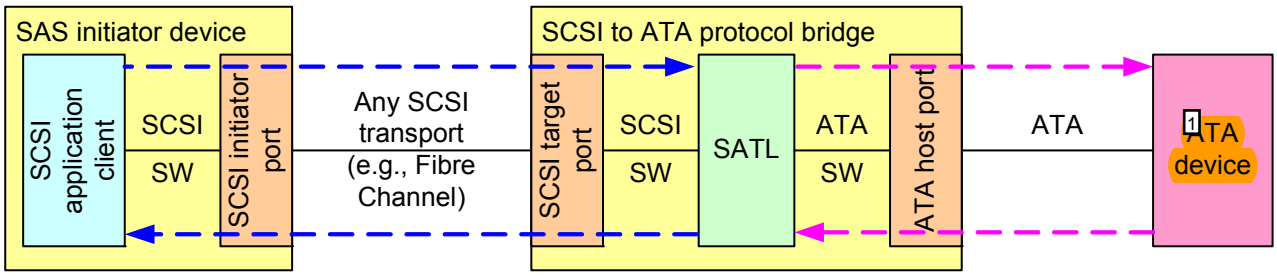

Figure 5 — SATL contained within a SCSI to ATA protocol bridge

EXAMPLE 2 - Figure 6 shows an ATA Host Bus Adapter (HBA) directly connected to an ATA device. The SATL provides SCSI transport protocol layer services to a SCSI application client in accordance with SAM-4.

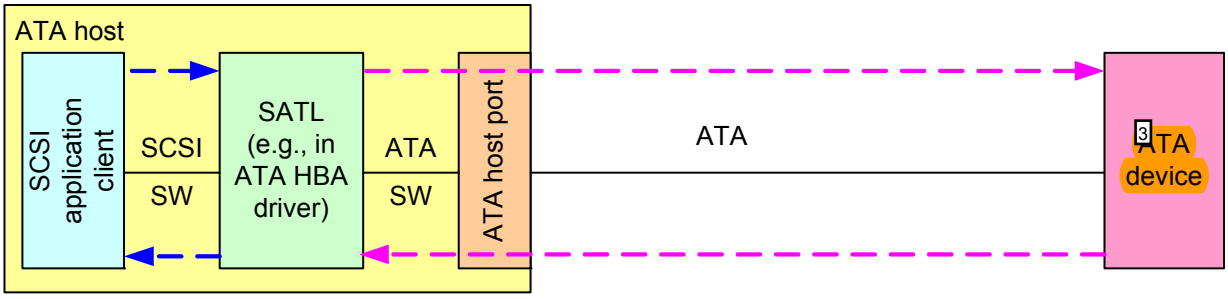

Figure 6 — SATL contained within an ATA host

EXAMPLE 3 - Figure 7 shows an ATA device accessed by a SAS STP initiator port (see SAS-1.1) through a SAS interconnect. The SAS initiator device includes a SATL to provide the SCSI transport protocol layer services to the application client in accordance with SAM-4.

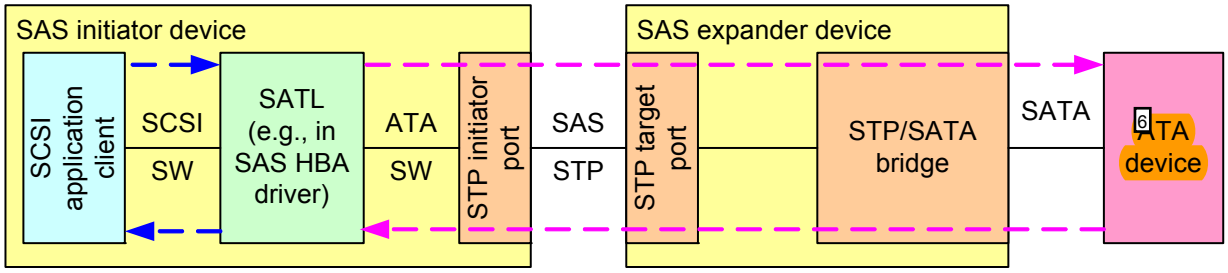

Figure 7 — SATL contained in a SAS initiator device

5.2 Multi-Initiator Configurations

SAM-4 defines configurations that may expose multiple I_T nexuses. Operation of a SATL exposed to multiple I_T nexuses are not fully specified in this standard (e.g., interactions of START STOP UNIT, REQUEST SENSE).

Page: 37

Number: 1 Author: HPQ-RElliott Subject: Highlight Date: 9/3/2008 9:42:24 AM -07'00'

ATA device
s/b
ATA device or ATAPI device

since "ATA device" is narrowly defined as General feature set only, not a term for all devices defined by the ATA standards

Status
moverby Rejected 10/20/2008 11:25:07 AM -07'00'
Author: moverby Subject: Sticky Note Date: 10/20/2008 11:25:03 AM -07'00'
Since these are examples, they are non-normative and would be correct.

Number: 2 Author: HPQ-RElliott Subject: Highlight Date: 9/3/2008 9:42:24 AM -07'00'

ATA device
s/b
ATA device or ATAPI device

since "ATA device" is narrowly defined as General feature set only, not a term for all devices defined by the ATA standards

Status
moverby Rejected 10/20/2008 11:26:29 AM -07'00'

Number: 3 Author: HPQ-RElliott Subject: Highlight Date: 9/3/2008 9:42:24 AM -07'00'

ATA device
s/b
ATA device or ATAPI device

since "ATA device" is narrowly defined as General feature set only, not a term for all devices defined by the ATA standards

Status
moverby Rejected 10/20/2008 3:03:14 PM -07'00'
Author: moverby Subject: Sticky Note Date: 10/20/2008 3:03:09 PM -07'00'
Rejected as these are examples and this is informative.

Number: 4 Author: HPQ-RElliott Subject: Highlight Date: 9/3/2008 9:42:24 AM -07'00'

ATA device
s/b
ATA device or ATAPI device

since "ATA device" is narrowly defined as General feature set only, not a term for all devices defined by the ATA standards

Status
moverby Rejected 10/20/2008 3:03:22 PM -07'00'

Number: 5 Author: Kevin_Marks Subject: Highlight Date: 8/11/2008 11:36:39 AM -07'00'

SAS-1.1
s/b
SAS-2

Status
moverby Accepted 11/3/2008 11:15:34 PM

Number: 6 Author: HPQ-RElliott Subject: Highlight Date: 9/3/2008 9:42:24 AM -07'00'

ATA device
s/b
ATA device or ATAPI device

since "ATA device" is narrowly defined as General feature set only, not a term for all devices defined by the ATA standards

Status
moverby Rejected 10/20/2008 3:03:28 PM -07'00'

Number: 7 Author: bmartin Subject: Cross-Out Date: 9/4/2008 12:51:42 AM -07'00'

fully

I do not believe that we have any specifications for operation of multiple I_T nexuses.

Status
moverby Rejected 10/20/2008 1:23:48 PM -07'00'
Author: moverby Subject: Sticky Note Date: 10/20/2008 1:23:44 PM -07'00'
Rejected in favor of George's proposed rewrite

Number: 8 Author: Kevin_Marks Subject: Highlight Date: 8/11/2008 11:37:55 AM -07'00'

START STOP UNIT, REQUEST SENSE).
s/b
START STOP UNIT command or REQUEST SENSE command).

Status
moverby Rejected 10/20/2008 1:25:08 PM -07'00'
Author: moverby Subject: Sticky Note Date: 10/20/2008 1:25:04 PM -07'00'
Rejected in favor of George's comment to delete the e.g. list as part of rewriting this intro.

Number: 9 Author: LSI-Penokie Subject: Highlight Date: 8/19/2008 2:20:10 PM -07'00'

With the previous change this << (e.g., interactions of START STOP UNIT, REQUEST SENSE). >> may have to be modified.

Status
moverby Accepted 10/20/2008 1:24:43 PM -07'00'
Author: moverby Subject: Sticky Note Date: 10/20/2008 1:24:39 PM -07'00'
Delete the e.g.

Comments from page 37 continued on next page

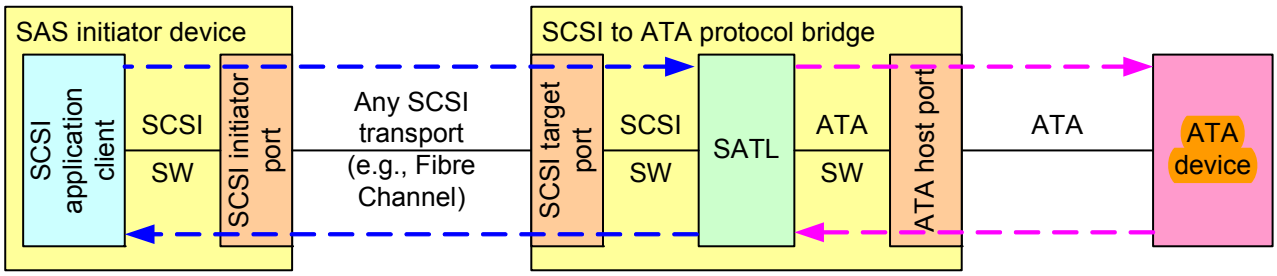

Figure 5 — SATL contained within a SCSI to ATA protocol bridge

EXAMPLE 2 - Figure 6 shows an ATA Host Bus Adapter (HBA) directly connected to an ATA device. The SATL provides SCSI transport protocol layer services to a SCSI application client in accordance with SAM-4.

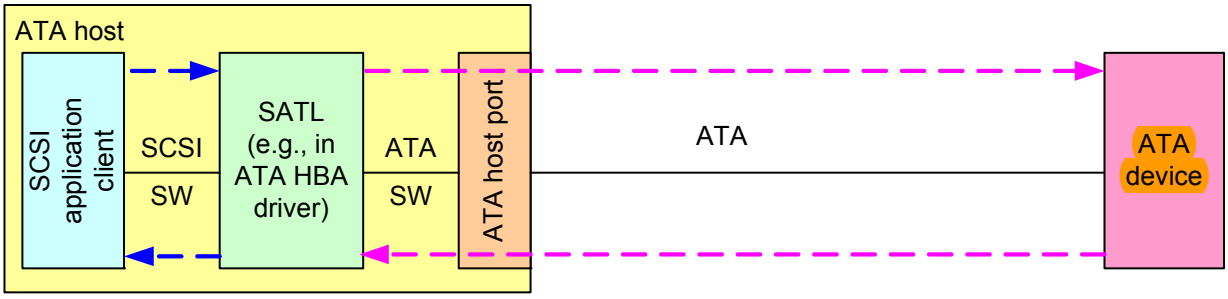

Figure 6 — SATL contained within an ATA host

EXAMPLE 3 - Figure 7 shows an ATA device accessed by a SAS STP initiator port (see SAS-1.1) through a SAS interconnect. The SAS initiator device includes a SATL to provide the SCSI transport protocol layer services to the application client in accordance with SAM-4.

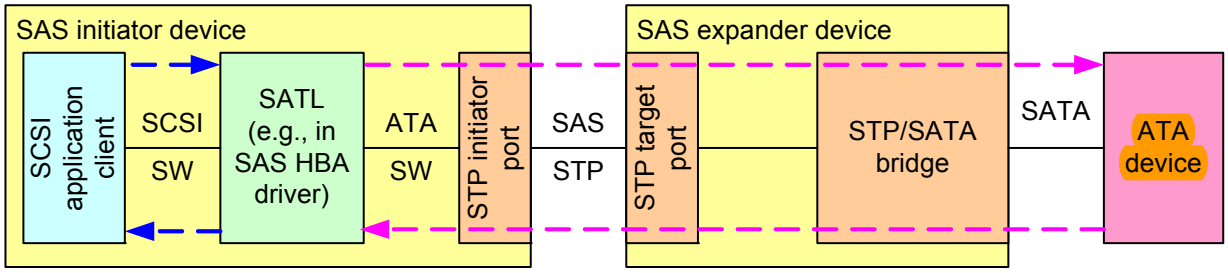

Figure 7 — SATL contained in a SAS initiator device

5.2 Multi-Initiator Configurations

SAM-4 defines configurations that may expose multiple I_T nexuses. Operation of a SATL exposed to multiple I_T nexuses are not fully specified in this standard (e.g., interactions of START STOP UNIT, REQUEST SENSE).

Status
moverby Accepted 10/20/2008 1:24:43 PM -07'00'

Number: 10 Author: LSI-Penokie Subject: Highlight Date: 8/19/2008 2:18:46 PM -07'00'

This should be << I_T nexuses are partially specified in this >>

Status
moverby Accepted 10/20/2008 1:22:59 PM -07'00'

Number: 11 Author: bmartin Subject: Highlight Date: 9/4/2008 12:50:33 AM -07'00'

are

s/b

is

Status
moverby Rejected 10/20/2008 1:24:03 PM -07'00'

Author: moverby Subject: Sticky Note Date: 10/20/2008 1:24:00 PM -07'00'

Rejected in favor of George's rewrite

5.3 Unit attention condition

The SATL shall report events affecting the state of the emulated SCSI device to the SCSI application clients by emulating unit attention conditions (see SAM-4).

A SATL that detects a link reset for a Serial ATA device or initiates any reset of an ATA device shall establish a unit attention condition on behalf of the logical unit corresponding to the ATA device with the sense key set to UNIT ATTENTION and the additional sense code set to POWER ON, RESET, OR BUS DEVICE RESET OCCURRED for the SCSI initiator port associated with each I_T nexus. The method a SATL uses to detect a link reset on the Serial ATA link is vendor specific.

The SATL shall report unit attention conditions, in accordance with SAM-4, regardless of whether the condition results from accessing an ATA device or a condition internal to the SATL.

5.4 Handling errors in ATA commands

When a SCSI command is translated into one or more ATA commands and one of the ATA commands completes with an error, the SATL shall terminate processing of the SCSI command and report the error as described in clause 11.

When interpreting data from an ATA command, the SATL shall use the data only if no error was reported for the command. In addition:

a) when interpreting IDENTIFY DEVICE data, if the Integrity word contains the Signature value defined in ATA8-ACS (i.e., word 255 bits 7:0), then the SATL shall use the data only if the Checksum is correct;
b) when interpreting SMART READ DATA data for the Summary SMART error log (i.e., log address 01h), the Comprehensive SMART error log (i.e., log address 02h), the SMART self-test log (i.e., log address 06h), or the Selective self-test log (i.e., log address 09h) (see ATA8-ACS), the SATL shall use the data only if the data structure checksum (i.e., byte 511) is correct; and
c) when interpreting READ LOG EXT data for the Extended Comprehensive SMART error log (i.e., log address 03h) or Extended SMART self-test log (i.e., log address 07h) (see ATA8-ACS), the SATL shall use the data only if the data structure checksum (i.e., byte 511) is correct.

5.5 ATA nexus loss

An ATA nexus loss event occurs when the SATL loses communication with the ATA device. If an ATA nexus loss event occurs:

a) the SATL shall terminate all commands being processed for the corresponding logical unit; and
b) the SATL shall establish a unit attention condition for each I_T nexus with the additional sense code set to:
   A) if the SATL is able to determine that the ATA device is no longer physically present, REPORTED LUNS DATA HAS CHANGED or DRIVE NOT PRESENT;
   B) if the SATL is unable to determine if the ATA device is physically present or not, INQUIRY DATA HAS CHANGED; or
   C) if the SATL is able to determine that the ATA device is present, INTERNAL TARGET FAILURE.

NOTE 3 - The method by which the SATL determines physical presence or absence of the ATA device is outside the scope of this standard (e.g., using cold presence detect, (see SATA-2.6), or a change in the ELEMENT STATUS CODE field in the Device or Array Device element (see SES-2).

NOTE 4 - SAM-4 and SPC-3 define how the SATL processes subsequent commands when the logical unit is no longer available (i.e., incorrect logical unit selection).

If the ATA nexus is restored or the SATL detects a power-on condition for an ATA device, the SATL shall perform the processing described in 5.6 for those events.

Number: 1 Author: HPQ-RElliott Subject: Highlight Date: 9/3/2008 9:42:24 AM -07'00'
Serial ATA device
s/b
Serial ATA attached ATA device

since this does not apply to ATAPI devices, but the term "Serial ATA device" means both ATA and ATAPI

Status
moverby Accepted 10/20/2008 1:29:11 PM -07'00'

Number: 2 Author: Kevin_Marks Subject: Highlight Date: 8/11/2008 11:41:44 AM -07'00'
Serial ATA device
s/b
SATA device

for consistency with rest of doc

Status
moverby Rejected 10/20/2008 1:28:52 PM -07'00'
Author: moverby Subject: Sticky Note Date: 10/20/2008 1:28:47 PM -07'00'
Rejected in favor of Rob Elliot's comment that notes that this section does not apply to an ATAPI device.

Number: 3 Author: Kevin_Marks Subject: Highlight Date: 8/11/2008 11:42:41 AM -07'00'
Serial ATA
s/b
SATA

Status
moverby Accepted 10/20/2008 1:29:17 PM -07'00'

Number: 4 Author: Kevin_Marks Subject: Highlight Date: 8/11/2008 11:45:27 AM -07'00'
IDENTIFY DEVICE data,
s/b
ATA IDENTIFY DEVICE data,

Status
moverby Accepted 10/20/2008 1:29:25 PM -07'00'

Number: 5 Author: Kevin_Marks Subject: Highlight Date: 8/11/2008 11:47:58 AM -07'00'
"b) when interpreting SMART READ DATA data for the Summary SMART error log (i.e., log address 01h), the Comprehensive SMART error log (i.e., log address 02h), the SMART self-test log (i.e., log address 06h), or the Selective self-test log (i.e., log address 09h) (see ATA8-ACS), the SATL shall use the data only if the data structure checksum (i.e., byte 511) is correct; and"
s/b
"b) when interpreting ATA SMART READ DATA data for the ATA Summary SMART error log (i.e., log address 01h), the ATA Comprehensive SMART error log (i.e., log address 02h), the ATA SMART self-test log (i.e., log address 06h), or the ATA Selective self-test log (i.e., log address 09h) (see ATA8-ACS), the SATL shall use the data only if the data structure checksum (i.e., byte 511) is correct; and"

Status
moverby Accepted 10/20/2008 1:29:31 PM -07'00'

Number: 6 Author: Kevin_Marks Subject: Highlight Date: 8/11/2008 11:48:57 AM -07'00'
"c) when interpreting READ LOG EXT data for the Extended Comprehensive SMART error log (i.e., log address 03h) or Extended SMART self-test log (i.e., log address 07h) (see ATA8-ACS), the SATL shall use the data only if the data structure checksum (i.e., byte 511) is correct."
s/b
"c) when interpreting ATA READ LOG EXT data for the ATA Extended Comprehensive SMART error log (i.e., log address 03h) or ATA Extended SMART self-test log (i.e., log address 07h) (see ATA8-ACS), the SATL shall use the data only if the data structure checksum (i.e., byte 511) is correct."

Status
moverby Accepted 10/20/2008 1:29:35 PM -07'00'

Number: 7 Author: HPQ-RElliott Subject: Highlight Date: 9/3/2008 9:42:24 AM -07'00'
ATA device

An ATA nexus loss also occurs for ATAPI devices.

Status
moverby Accepted 10/20/2008 1:30:01 PM -07'00'
Author: moverby Subject: Sticky Note Date: 10/20/2008 1:29:58 PM -07'00'
replace with SATA device

Number: 8 Author: HPQ-RElliott Subject: Highlight Date: 9/3/2008 9:42:24 AM -07'00'
occurs:
s/b
occurs, then:

Status
moverby Accepted 10/20/2008 1:30:08 PM -07'00'

Number: 9 Author: LSI-Besmer Subject: Note Date: 9/9/2008 10:03:16 AM -07'00'
ASCQ "DRIVE NOT PRESENT" does not exist, perhaps "MEDIUM NOT PRESENT".

Status
moverby Accepted 9/9/2008 1:52:39 PM -07'00'
Author: moverby Subject: Sticky Note Date: 9/9/2008 1:52:36 PM -07'00'
Remove DRIVE NOT PRESENT

Number: 10 Author: LSI-Penokie Subject: Highlight Date: 8/19/2008 2:37:58 PM -07'00'

Comments from page 38 continued on next page

5.3 Unit attention condition

The SATL shall report events affecting the state of the emulated SCSI device to the SCSI application clients by emulating unit attention conditions (see SAM-4).

A SATL that detects a link reset for a Serial ATA device or initiates any reset of an ATA device shall establish a unit attention condition on behalf of the logical unit corresponding to the ATA device with the sense key set to UNIT ATTENTION and the additional sense code set to POWER ON, RESET, OR BUS DEVICE RESET OCCURRED for the SCSI initiator port associated with each I_T nexus. The method a SATL uses to detect a link reset on the Serial ATA link is vendor specific.

The SATL shall report unit attention conditions, in accordance with SAM-4, regardless of whether the condition results from accessing an ATA device or a condition internal to the SATL.

5.4 Handling errors in ATA commands

When a SCSI command is translated into one or more ATA commands and one of the ATA commands completes with an error, the SATL shall terminate processing of the SCSI command and report the error as described in clause 11.

When interpreting data from an ATA command, the SATL shall use the data only if no error was reported for the command. In addition:

a) when interpreting IDENTIFY DEVICE data, if the Integrity word contains the Signature value defined in ATA8-ACS (i.e., word 255 bits 7:0), then the SATL shall use the data only if the Checksum is correct;
b) when interpreting SMART READ DATA data for the Summary SMART error log (i.e., log address 01h), the Comprehensive SMART error log (i.e., log address 02h), the SMART self-test log (i.e., log address 06h), or the Selective self-test log (i.e., log address 09h) (see ATA8-ACS), the SATL shall use the data only if the data structure checksum (i.e., byte 511) is correct; and
c) when interpreting READ LOG EXT data for the Extended Comprehensive SMART error log (i.e., log address 03h) or Extended SMART self-test log (i.e., log address 07h) (see ATA8-ACS), the SATL shall use the data only if the data structure checksum (i.e., byte 511) is correct.

5.5 ATA nexus loss

An ATA nexus loss event occurs when the SATL loses communication with the ATA device. If an ATA nexus loss event occurs:

a) the SATL shall terminate all commands being processed for the corresponding logical unit; and
b) the SATL shall establish a unit attention condition for each I_T nexus with the additional sense code set to:
   A) if the SATL is able to determine that the ATA device is no longer physically present, REPORTED LUNS DATA HAS CHANGED or DRIVE NOT PRESENT;
   B) if the SATL is unable to determine if the ATA device is physically present or not, INQUIRY DATA HAS CHANGED; or
   C) if the SATL is able to determine that the ATA device is present, INTERNAL TARGET FAILURE.

NOTE 3 - The method by which the SATL determines physical presence or absence of the ATA device is outside the scope of this standard (e.g., using cold presence detect, (see SATA-2.6), or a change in the ELEMENT STATUS CODE field in the Device or Array Device element (see SES-2).

NOTE 4 - SAM-4 and SPC-3 define how the SATL processes subsequent commands when the logical unit is no longer available (i.e., incorrect logical unit selection).

If the ATA nexus is restored or the SATL detects a power-on condition for an ATA device, the SATL shall perform the processing described in 5.6 for those events.

This note should be changed to normative text.

Status
moverby Accepted 10/20/2008 3:04:59 PM -07'00'

Number: 11 Author: HPQ-RElliott Subject: Cross-Out Date: 9/3/2008 9:42:24 AM -07'00'

Delete ,

Status
moverby Accepted 10/20/2008 1:30:44 PM -07'00'

Number: 12 Author: Kevin_Marks Subject: Cross-Out Date: 8/11/2008 12:12:56 PM -07'00'

Status
moverby Accepted 10/20/2008 1:31:16 PM -07'00'

Number: 13 Author: LSI-Penokie Subject: Highlight Date: 8/19/2008 2:30:52 PM -07'00'

This is not a ")" on this e.g. << (e.g., using cold presence detect, >>

Status
moverby Accepted 10/20/2008 1:31:07 PM -07'00'

Number: 14 Author: HPQ-RElliott Subject: Highlight Date: 9/3/2008 9:42:24 AM -07'00'

)
s/b
))

Status
moverby Accepted 10/20/2008 1:31:10 PM -07'00'

Number: 15 Author: Kevin_Marks Subject: Highlight Date: 8/11/2008 12:13:58 PM -07'00'

SPC-3
s/b
SPC-4

Status
moverby Accepted 11/3/2008 11:15:38 PM

Number: 16 Author: Kevin_Marks Subject: Highlight Date: 8/11/2008 12:14:56 PM -07'00'

device, the
s/b
device, then the

Status
moverby Accepted 10/20/2008 1:31:25 PM -07'00'

5.6 ATA hardware and software reset processing

The hardware reset routines performed by the ATA device include the actions performed by the ATA device for an ATA software reset (see 3.1.23 and ATA8-AAM), and the actions defined in ATA8-ACS and the applicable ATA transport standards.

An ATA hardware reset may be caused either by the SATL or by the ATA device. If an ATA hardware reset or an ATA software reset occurs except as part of processing a SCSI task management function (see 6.3), then the SATL shall:

a) terminate processing of all commands for each logical unit affected by the reset;
b) restore the ATA volatile settings (see 3.1.25) of the ATA device (e.g., by sending an ATA SET FEATURES command) to values consistent with the saved values of mode pages if savable mode pages are supported and available, or default values if savable mode pages are not supported or are not available; and
c) establish a unit attention condition for each I_T_L nexus with the additional sense code set to POWER ON, RESET, OR BUS DEVICE RESET OCCURRED.

5.7 Translation of Large Physical Sectors

For SCSI large physical sector operation, see SBC-3 for information on the:

a) Logical Blocks model;
b) Physical Blocks model; and
c) READ CAPACITY(16) command.

For ATA large physical sector operation, see ATA8-ACS for information on the:

a) Long Logical Sector (LLS) feature set;
b) Long Physical Sector (LPS) feature set;
c) IDENTIFY DEVICE command;
d) Annex C; and
e) Annex E.

Table 5 describes parameters used in the translation and operation of large physical sectors and where the values for those parameters are found in both SCSI and ATA environments.

Table 5 — Large Physical Block Geometry Parameters

Parameter	SCSI	ATA
Logical Sector Size	READ CAPACITY (16) LOGICAL BLOCK LENGTH IN BYTES field	ATA IDENTIFY DEVICE data words 117 to 118
Logical Sectors Per Physical Sector Exponent	READ CAPACITY (16) LOGICAL BLOCKS PER PHYSICAL BLOCK field	ATA IDENTIFY DEVICE data words 106, bits 3:0
Logical Sectors Per Physical Sector	$2^{\text{SCSI Logical Sectors Per Physical Sector Exponent}}$	$2^{\text{ATA Logical Sectors Per Physical Sector Exponent}}$
Logical Sector Alignment	READ CAPACITY (16) LOWEST ALIGNED LOGICAL BLOCK ADDRESS field	ATA IDENTIFY DEVICE data word 209

It is important to note that

a) SCSI Logical Sector Size is measured in bytes, whereas ATA Logical Sector size is measured in words.
b) See ATA IDENTIFY DEVICE for details on when the data contained in words 106, 117-118, and 209 are valid.
c) The relationship between the SCSI and ATA logical sector alignment is:

Page: 39

Number: 1 Author: HPQ-RElliott Subject: Highlight Date: 9/3/2008 9:42:24 AM -07'00'
ATA device

ATAPI devices also respond to ATA hardware resets and software resets

Status
moverby Rejected 10/20/2008 3:13:52 PM -07'00'
Author: moverby Subject: Sticky Note Date: 10/20/2008 3:13:49 PM -07'00'
Rejected as this is handled in the ATAPI Annex as being unspecified (which would cause a reader to go to another standard)

Number: 2 Author: Kevin_Marks Subject: Cross-Out Date: 8/11/2008 12:17:01 PM -07'00'

Status
moverby Accepted 10/20/2008 1:32:14 PM -07'00'
Author: moverby Subject: Sticky Note Date: 10/20/2008 1:32:11 PM -07'00'
cross out , and the and. Then put a comma following ATA8-ACS.

Number: 3 Author: bmartin Subject: Comment on Text Date: 9/4/2008 12:53:30 AM -07'00'
This is a circular reference that does not add any clarity.

Status
moverby Accepted 10/20/2008 1:33:06 PM -07'00'
Author: moverby Subject: Sticky Note Date: 10/20/2008 1:33:03 PM -07'00'
Delete just the reference to 3.1.23.

Number: 4 Author: STX-Hatfield Subject: Highlight Date: 8/28/2008 10:41:23 AM -07'00'
ATA hardware reset

This does not account for SATA Software Settings Preservations.
Should there be additional text to talk about SSP ?

Status
moverby Rejected 9/9/2008 10:13:25 AM -07'00'
Author: moverby Subject: Sticky Note Date: 9/10/2008 1:43:27 PM -07'00'
Rejected after discussion in the WG as the ATA volatile settings covers things that changed, if nothing changed due to SSP, there is nothing for the SATL to do.

Number: 5 Author: LSI-Penokie Subject: Highlight Date: 8/19/2008 3:03:02 PM -07'00'
You have to put the name of these annexs or you have to delete the references.

Status
moverby Accepted 10/20/2008 3:15:23 PM -07'00'
Number: 6 Author: bmartin Subject: Comment on Text Date: 9/4/2008 12:56:27 AM -07'00'
These should reference the title of the Annexes rather than a lettered annex (if they even belong here)

Status
moverby Accepted 10/20/2008 3:15:12 PM -07'00'
Number: 7 Author: HPQ-RElliott Subject: Highlight Date: 9/3/2008 9:42:24 AM -07'00'
Not supposed to refer to section numbers in other standards

Status
moverby Accepted 10/20/2008 3:16:11 PM -07'00'
Author: moverby Subject: Sticky Note Date: 10/20/2008 3:15:52 PM -07'00'
Accepted - these will be changed to the names of the annexes

Number: 8 Author: HPQ-RElliott Subject: Note Date: 9/3/2008 9:42:24 AM -07'00'
Delete whitespace above table 5

Status
moverby Accepted 10/20/2008 1:34:21 PM -07'00'
Number: 9 Author: HPQ-RElliott Subject: Highlight Date: 9/3/2008 9:42:24 AM -07'00'
Table 5 —

font in table title is wrong

Status
moverby Accepted 10/20/2008 1:34:34 PM -07'00'
Number: 10 Author: LSI-Penokie Subject: Highlight Date: 8/19/2008 3:01:25 PM -07'00'
This font is wrong

Status
moverby Accepted 10/20/2008 1:34:29 PM -07'00'
Number: 11 Author: HPQ-RElliott Subject: Highlight Date: 9/3/2008 9:42:24 AM -07'00'
READ CAPACITY (16)
s/b
READ CAPACITY (16) parameter data

throughout table 5

Status
moverby Accepted 10/20/2008 1:34:51 PM -07'00'
Number: 12 Author: LSI-Penokie Subject: Sticky Note Date: 8/19/2008 3:04:30 PM -07'00'
Table 5 - text in this table is too close to the column lines. This needs to be fixed.

Status

Comments from page 39 continued on next page

5.6 ATA hardware and software reset processing

The hardware reset routines performed by the ATA device include the actions performed by the ATA device for an ATA software reset (see 3.1.23 and ATA8-AAM), and the actions defined in ATA8-ACS and the applicable ATA transport standards.

An ATA hardware reset may be caused either by the SATL or by the ATA device. If an ATA hardware reset or an ATA software reset occurs except as part of processing a SCSI task management function (see 6.3), then the SATL shall:

a) terminate processing of all commands for each logical unit affected by the reset;
b) restore the ATA volatile settings (see 3.1.25) of the ATA device (e.g., by sending an ATA SET FEATURES command) to values consistent with the saved values of mode pages if savable mode pages are supported and available, or default values if savable mode pages are not supported or are not available; and
c) establish a unit attention condition for each I_T_L nexus with the additional sense code set to POWER ON, RESET, OR BUS DEVICE RESET OCCURRED.

5.7 Translation of Large Physical Sectors

For SCSI large physical sector operation, see SBC-3 for information on the:

a) Logical Blocks model;
b) Physical Blocks model; and
c) READ CAPACITY(16) command.

For ATA large physical sector operation, see ATA8-ACS for information on the:

a) Long Logical Sector (LLS) feature set;
b) Long Physical Sector (LPS) feature set;
c) IDENTIFY DEVICE command;
d) Annex C; and
e) Annex E.

Table 5 describes parameters used in the translation and operation of large physical sectors and where the values for those parameters are found in both SCSI and ATA environments.

Table 5 — Large Physical Block Geometry Parameters

Parameter	SCSI	ATA
Logical Sector Size	READ CAPACITY (16) LOGICAL BLOCK LENGTH IN BYTES field	ATA IDENTIFY DEVICE data words 117 to 118
Logical Sectors Per Physical Sector Exponent	READ CAPACITY (16) LOGICAL BLOCKS PER PHYSICAL BLOCK field	ATA IDENTIFY DEVICE data words 106, bits 3:0
Logical Sectors Per Physical Sector	$2^{\text{SCSI Logical Sectors Per Physical Sector Exponent}}$	$2^{\text{ATA Logical Sectors Per Physical Sector Exponent}}$
Logical Sector Alignment	READ CAPACITY (16) LOWEST ALIGNED LOGICAL BLOCK ADDRESS field	ATA IDENTIFY DEVICE data word 209

It is important to note that

a) SCSI Logical Sector Size is measured in bytes, whereas ATA Logical Sector size is measured in words.
b) See ATA IDENTIFY DEVICE for details on when the data contained in words 106, 117-118, and 209 are valid.
c) The relationship between the SCSI and ATA logical sector alignment is:

moverby Accepted 10/20/2008 1:34:58 PM -07'00'

Number: 13 Author: HPQ-RElliott Subject: Highlight Date: 9/3/2008 9:42:24 AM -07'00'

It is important to note...

is not standardese

Status

moverby Rejected 10/20/2008 1:36:08 PM -07'00'

Author: moverby Subject: Sticky Note Date: 10/20/2008 1:36:04 PM -07'00'

Rejected in favor of George's rewrite

Number: 14 Author: LSI-Penokie Subject: Highlight Date: 8/19/2008 3:14:14 PM -07'00'

This << It is important to note that >> should be << Further relationships between SCSI and ATA follow: >>

Status

moverby Accepted 10/20/2008 1:35:51 PM -07'00'

Number: 15 Author: HPQ-RElliott Subject: Highlight Date: 9/3/2008 9:42:24 AM -07'00'

that
s/b
that:

Status

moverby Rejected 10/20/2008 1:35:45 PM -07'00'

Author: moverby Subject: Sticky Note Date: 10/20/2008 1:35:39 PM -07'00'

Rejected in favor of George's proposed rewrite

Number: 16 Author: LSI-Penokie Subject: Highlight Date: 8/19/2008 3:14:50 PM -07'00'

This << words. >> should be << words; >>

Status

moverby Accepted 10/20/2008 1:36:46 PM -07'00'

Number: 17 Author: HPQ-RElliott Subject: Highlight Date: 9/3/2008 9:42:24 AM -07'00'

.
s/b
;

Status

moverby Accepted 10/20/2008 1:36:18 PM -07'00'

Number: 18 Author: bmartin Subject: Highlight Date: 9/4/2008 12:59:27 AM -07'00'

See ATA IDENTIFY DEVICE for details on when the data contained in words 106, 117-118, and 209 are valid.

s/b

ATA IDENTIFY DEVICE provides details on when the data contained in words 106, 117-118, and 209 are valid.

Status

moverby Accepted 10/20/2008 1:37:37 PM -07'00'

Author: moverby Subject: Sticky Note Date: 10/20/2008 1:37:34 PM -07'00'

Only accepting the wording change for provides. Other changes modify the rest.

Number: 19 Author: LSI-Penokie Subject: Highlight Date: 8/19/2008 3:07:08 PM -07'00'

This << 117-118 >> is the not correct as it is not the 117 minus 118. It should be changed to 117..118 or 117 through 118.

Status

moverby Accepted 10/20/2008 1:36:54 PM -07'00'

Number: 20 Author: LSI-Penokie Subject: Highlight Date: 8/19/2008 3:15:24 PM -07'00'

This << valid. >> should be << valid; and >

Status

moverby Accepted 10/20/2008 1:37:45 PM -07'00'

Number: 21 Author: HPQ-RElliott Subject: Highlight Date: 9/3/2008 9:42:24 AM -07'00'

.
s/b
;

Status

moverby Accepted 10/20/2008 1:37:41 PM -07'00'

Number: 22 Author: Kevin_Marks Subject: Sticky Note Date: 8/11/2008 12:35:45 PM -07'00'

Need a),b),c) list formatting, missing : and ;'s

Status

moverby Accepted 10/20/2008 1:37:52 PM -07'00'

SCSI Logical Sector Alignment = (x - ATA Logical Sector Alignment) modulus x

where x = Logical Sectors Per Physical Sector

Figure 8 — Translation of Logical Sector Alignment (part 1)

ATA: LOGICAL SECTORS PER PHYSICAL SECTOR field set to 1h
SCSI: LOGICAL BLOCKS PER PHYSICAL BLOCK field set to 1h
(indicating 2^1 logical blocks per physical block):

ATA: LOGICAL SECTOR ALIGNMENT field set to 0:
SCSI: LOWEST ALIGNED LOGICAL BLOCK ADDRESS field set to 0:

LBA 0	LBA 1	LBA 2	LBA 3	LBA 4	LBA 5	LBA 6	LBA 7	LBA 8	LBA 9	...
PB		PB		PB		PB		PB		...

ATA: LOGICAL SECTORS PER PHYSICAL SECTOR field set to 1h
SCSI: LOGICAL BLOCKS PER PHYSICAL BLOCK field set to 1h
(indicating 2^1 logical blocks per physical block):

ATA: LOGICAL SECTOR ALIGNMENT field set to 1:
SCSI: LOWEST ALIGNED LOGICAL BLOCK ADDRESS field set to 1:

NA	LBA 0	LBA 1	LBA 2	LBA 3	LBA 4	LBA 5	LBA 6	LBA 7	LBA 8	LBA 9	LBA 10 ...
PB		PB		PB		PB		PB		PB	...

Key:
LBA n = logical block with LBA n
PB = physical block
NA= not accessible or addressable

The LOGICAL BLOCKS PER PHYSICAL BLOCK field and LOWEST ALIGNED LOGICAL BLOCK ADDRESS field are in the READ CAPACITY (16) data.

Page: 40

Number: 1 Author: HPQ-RElliott Subject: Note Date: 9/3/2008 9:42:24 AM -07'00'

Text in c) after the : needs to be indented more

Status
moverby Accepted 10/29/2008 4:19:20 PM -07'00'

Number: 2 Author: LSI-Penokie Subject: Highlight Date: 8/19/2008 3:19:53 PM -07'00'

This should not be a << x >> as it can be easily confused with the multiplication symbol. Either change to an different variable or just replace the << x >> with << logical sectors per physical sector >> and remove the where statement.

Status
moverby Accepted 10/29/2008 4:19:43 PM -07'00'

Author: moverby Subject: Sticky Note Date: 10/29/2008 4:19:38 PM -07'00'

Make the variable name y

Number: 3 Author: HPQ-RElliott Subject: Highlight Date: 9/3/2008 9:42:24 AM -07'00'

where
should be on its own line

Status
moverby Accepted 10/29/2008 4:19:50 PM -07'00'

Number: 4 Author: moverby Subject: Sticky Note Date: 10/20/2008 3:19:27 PM -07'00'

There are duplicate figure numbers of 8, 9, and 10. Check numbering in frame style for possible overrides.

Status
moverby Accepted 10/29/2008 4:19:57 PM -07'00'

Number: 5 Author: HPQ-RElliott Subject: Note Date: 9/3/2008 9:42:24 AM -07'00'

There needs to be a paragraph introducing each figure.

Status
moverby Accepted 10/29/2008 4:21:33 PM -07'00'

Author: moverby Subject: Sticky Note Date: 10/20/2008 3:33:59 PM -07'00'

Add text stating: Figure 8 shows examples of physical to logical sector mapping.

Number: 6 Author: Kevin_Marks Subject: Highlight Date: 8/11/2008 12:46:52 PM -07'00'

Figure 8 is missing reference in text

Status
moverby Accepted 11/3/2008 11:15:59 PM

Author: moverby Subject: Sticky Note Date: 11/3/2008 11:15:56 PM

Add intro paragraph and fix numbering problem

Number: 7 Author: moverby Subject: Highlight Date: 10/20/2008 3:35:37 PM -07'00'

Retitle figure to Logical Sector Alignment Examples

Status
moverby Accepted 10/20/2008 3:35:31 PM -07'00'

Number: 8 Author: LSI-Penokie Subject: Highlight Date: 8/19/2008 3:26:41 PM -07'00'

This << (part 1) >> should be << (part 1 of 3)

Status
moverby Accepted 10/20/2008 3:26:00 PM -07'00'

Number: 9 Author: HPQ-RElliott Subject: Highlight Date: 9/3/2008 9:42:24 AM -07'00'

In figures 8, 9, and 10, the ATA row "LOGICAL" start with a capital L and then has smallcaps. It should be all smallcaps or all mixed case

Status
moverby Accepted 10/29/2008 4:21:51 PM -07'00'

Author: moverby Subject: Sticky Note Date: 10/29/2008 4:21:48 PM -07'00'

Make all lower case

Number: 10 Author: HPQ-RElliott Subject: Highlight Date: 9/3/2008 9:42:24 AM -07'00'

ALIGNMENTfield
s/b
ALIGNMENT field

Status
moverby Accepted 10/29/2008 4:24:01 PM -07'00'

Number: 11 Author: LSI-Penokie Subject: Highlight Date: 8/19/2008 3:20:56 PM -07'00'

Needs to have a space between << ALIGNMENT >> and << field >>.

Status
moverby Accepted 10/29/2008 4:23:57 PM -07'00'

Number: 12 Author: Kevin_Marks Subject: Highlight Date: 8/11/2008 12:39:46 PM -07'00'

ALIGNMENTfield

add space.

Status
moverby Accepted 10/29/2008 4:23:53 PM -07'00'

Number: 13 Author: Kevin_Marks Subject: Highlight Date: 8/11/2008 12:40:03 PM -07'00'

0:
s/b
1h:

Status
moverby Accepted 11/3/2008 11:16:12 PM

Comments from page 40 continued on next page

SCSI Logical Sector Alignment = (x - ATA Logical Sector Alignment) modulus x

where x = Logical Sectors Per Physical Sector

Figure 8 — Translation of Logical Sector Alignment (part 1)

ATA: LOGICAL SECTORS PER PHYSICAL SECTOR field set to 1h
SCSI: LOGICAL BLOCKS PER PHYSICAL BLOCK field set to 1h
(indicating 2^1 logical blocks per physical block):

ATA: LOGICAL SECTOR ALIGNMENTfield set to 0:
SCSI: LOWEST ALIGNED LOGICAL BLOCK ADDRESS field set to 0:

LBA 0	LBA 1	LBA 2	LBA 3	LBA 4	LBA 5	LBA 6	LBA 7	LBA 8	LBA 9	...
PB		PB		PB		PB		PB		...

ATA: LOGICAL SECTORS PER PHYSICAL SECTOR field set to 1h
SCSI: LOGICAL BLOCKS PER PHYSICAL BLOCK field set to 1h
(indicating 2^1 logical blocks per physical block):

ATA: LOGICAL SECTOR ALIGNMENTfield set to 1.
SCSI: LOWEST ALIGNED LOGICAL BLOCK ADDRESS field set to 1.

NA	LBA 0	LBA 1	LBA 2	LBA 3	LBA 4	LBA 5	LBA 6	LBA 7	LBA 8	LBA 9	LBA 10 ...
PB		PB		PB		PB		PB		PB	...

Key:
LBA n = logical block with LBA n
PB = physical block
NA= not accessible or addressable

The LOGICAL BLOCKS PER PHYSICAL BLOCK field and LOWEST ALIGNED LOGICAL BLOCK ADDRESS field are in the READ CAPACITY (16) data.

Author: moverby Subject: Sticky Note Date: 11/3/2008 11:16:09 PM
0h:

Number: 14 Author: Kevin_Marks Subject: Highlight Date: 8/11/2008 12:40:41 PM -07'00'
0:
s/b
1h:

Status
moverby Accepted 11/3/2008 11:16:21 PM
Author: moverby Subject: Sticky Note Date: 11/3/2008 11:16:17 PM
0h:

Number: 15 Author: moverby Subject: Sticky Note Date: 10/20/2008 3:44:37 PM -07'00'
Make color of this diagram consistent with the others

Status
moverby Accepted 10/20/2008 3:44:34 PM -07'00'
Number: 16 Author: Kevin_Marks Subject: Highlight Date: 8/11/2008 12:41:08 PM -07'00'
ALIGNMENTfield

add space

Status
moverby Accepted 10/29/2008 4:24:38 PM -07'00'
Number: 17 Author: HPQ-RElliott Subject: Highlight Date: 9/3/2008 9:42:24 AM -07'00'
ALIGNMENTfield
s/b
ALIGNMENT field

Status
moverby Accepted 10/29/2008 4:24:34 PM -07'00'
Number: 18 Author: Kevin_Marks Subject: Highlight Date: 8/11/2008 12:41:32 PM -07'00'
1:
s/b
1h:

Status
moverby Accepted 11/3/2008 11:16:24 PM
Number: 19 Author: Kevin_Marks Subject: Highlight Date: 8/11/2008 12:41:44 PM -07'00'
1:
s/b
1h:

Status
moverby Accepted 11/3/2008 11:16:28 PM
Number: 20 Author: Kevin_Marks Subject: Highlight Date: 8/11/2008 12:44:16 PM -07'00'
the READ CAPACITY (16) data.
s/b
the READ CAPACITY (16) command data.

Status
moverby Accepted 10/29/2008 4:25:28 PM -07'00'

Figure 9 — Translation of Logical Sector Alignment (part 2)

ATA: LOGICAL SECTORS PER PHYSICAL SECTOR field set to 2h
SCSI: LOGICAL BLOCKS PER PHYSICAL BLOCK field set to 2h
(indicating 2^2 logical blocks per physical block):

ATA: LOGICAL SECTOR ALIGNMENT field set to 0:
SCSI: LOWEST ALIGNED LOGICAL BLOCK ADDRESS field set to 0:

LBA 0	LBA 1	LBA 2	LBA 3	LBA 4	LBA 5	LBA 6	LBA 7	...
PB				PB				...

ATA: LOGICAL SECTORS PER PHYSICAL SECTOR field set to 2h
SCSI: LOGICAL BLOCKS PER PHYSICAL BLOCK field set to 2h
(indicating 2^2 logical blocks per physical block):

ATA: LOGICAL SECTOR ALIGNMENT field set to 3:
SCSI: LOWEST ALIGNED LOGICAL BLOCK ADDRESS field set to 1:

NA	LBA 0	LBA 1	LBA 2	LBA 3	LBA 4	LBA 5	LBA 6	LBA 7	LBA 8	...
PB			PB			PB				...

ATA: LOGICAL SECTORS PER PHYSICAL SECTOR field set to 2h
SCSI: LOGICAL BLOCKS PER PHYSICAL BLOCK field set to 2h
(indicating 2^2 logical blocks per physical block):

ATA: LOGICAL SECTOR ALIGNMENT field set to 2:
SCSI: LOWEST ALIGNED LOGICAL BLOCK ADDRESS field set to 2:

NA	LBA 0	LBA 1	LBA 2	LBA 3	LBA 4	LBA 5	LBA 6	LBA 7	LBA 8	LBA 9	...
PB			PB			PB				...

ATA: LOGICAL SECTORS PER PHYSICAL SECTOR field set to 2h
SCSI: LOGICAL BLOCKS PER PHYSICAL BLOCK field set to 2h
(indicating 2^2 logical blocks per physical block):

ATA: LOGICAL SECTOR ALIGNMENT field set to 1:
SCSI: LOWEST ALIGNED LOGICAL BLOCK ADDRESS field set to 3:

NA	LBA 0	LBA 1	LBA 2	LBA 3	LBA 4	LBA 5	LBA 6	LBA 7	LBA 8	LBA 9	LBA 10	...
PB				PB				PB				...

Key:
LBA n = logical block with LBA n
PB = physical block
NA = not accessible and not addressable

The LOGICAL BLOCKS PER PHYSICAL BLOCK field and LOWEST ALIGNED LOGICAL BLOCK ADDRESS field are in the READ CAPACITY (16) data.

Page: 41

Number: 1 Author: Kevin_Marks Subject: Highlight Date: 8/11/2008 12:51:08 PM -07'00'
Figure 9 missing reference in text.

Status
moverby Rejected 10/20/2008 3:36:28 PM -07'00'
Author: moverby Subject: Sticky Note Date: 10/20/2008 3:36:24 PM -07'00'
Rejected as this is supposed to be one figure with 3 parts.

Number: 2 Author: LSI-Penokie Subject: Highlight Date: 8/19/2008 3:27:00 PM -07'00'
This << (part 2) >> should be << (part 2 of 3)

Status
moverby Accepted 10/20/2008 1:38:25 PM -07'00'

Number: 3 Author: Kevin_Marks Subject: Highlight Date: 8/11/2008 12:44:47 PM -07'00'
0:
s/b
1h:

Status
moverby Rejected 10/20/2008 3:37:27 PM -07'00'
Author: moverby Subject: Sticky Note Date: 10/20/2008 3:37:22 PM -07'00'
Rejected. 0 is correct.

Number: 4 Author: Kevin_Marks Subject: Highlight Date: 8/11/2008 12:44:57 PM -07'00'
0:
s/b
1h:

Status
moverby Rejected 10/20/2008 3:37:49 PM -07'00'
Author: moverby Subject: Sticky Note Date: 10/20/2008 3:37:46 PM -07'00'
Rejected. 0 is the correct value.

Number: 5 Author: Kevin_Marks Subject: Highlight Date: 8/11/2008 12:45:34 PM -07'00'
3:
s/b
3h:

Status
moverby Accepted 10/20/2008 3:39:35 PM -07'00'

Number: 6 Author: Kevin_Marks Subject: Highlight Date: 8/11/2008 12:45:45 PM -07'00'
1:
s/b
1h:

Status
moverby Accepted 11/3/2008 4:53:54 PM

Number: 7 Author: Kevin_Marks Subject: Highlight Date: 8/11/2008 12:49:32 PM -07'00'
2:
s/b
2h:

Status
moverby Accepted 11/3/2008 4:53:58 PM

Number: 8 Author: Kevin_Marks Subject: Highlight Date: 8/11/2008 12:49:37 PM -07'00'
2:
s/b
2h:

Status
moverby Accepted 11/3/2008 4:54:02 PM

Number: 9 Author: Kevin_Marks Subject: Highlight Date: 8/11/2008 12:49:46 PM -07'00'
1:
s/b
1h:

Status
moverby Accepted 11/3/2008 4:54:06 PM

Number: 10 Author: Kevin_Marks Subject: Highlight Date: 8/11/2008 12:49:59 PM -07'00'
3:
s/b
3h:

Status
moverby Accepted 11/3/2008 4:54:09 PM

Number: 11 Author: Kevin_Marks Subject: Highlight Date: 8/11/2008 12:50:35 PM -07'00'
the READ CAPACITY (16) data.
s/b
the READ CAPACITY (16) command data.

Status
moverby Accepted 10/20/2008 1:39:25 PM -07'00'
Author: moverby Subject: Sticky Note Date: 10/20/2008 1:39:22 PM -07'00'
READ CAPACITY (16) parameter data.

Figure 10 — Translation of Logical Sector Alignment (part 3)

ATA: LOGICAL SECTORS PER PHYSICAL SECTOR field set to 3h
SCSI: LOGICAL BLOCKS PER PHYSICAL BLOCK field set to 3h
(indicating 2^3 logical blocks per physical block):

ATA: LOGICAL SECTOR ALIGNMENT field set to 1:
SCSI: LOWEST ALIGNED LOGICAL BLOCK ADDRESS field set to 1:

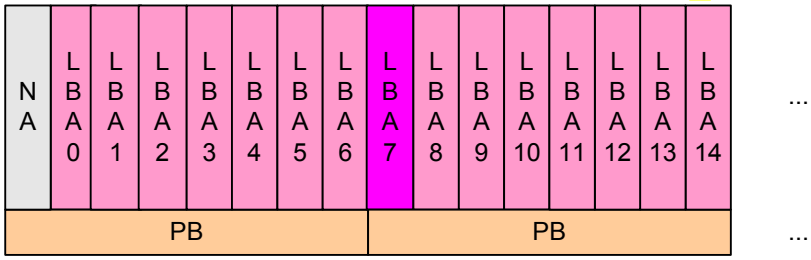

ATA: LOGICAL SECTORS PER PHYSICAL SECTOR field set to 1h
SCSI: LOGICAL BLOCKS PER PHYSICAL BLOCK field set to 1h
(indicating 2^3 logical blocks per physical block):

ATA: LOGICAL SECTOR ALIGNMENT field set to 1:
SCSI: LOWEST ALIGNED LOGICAL BLOCK ADDRESS field set to 1:

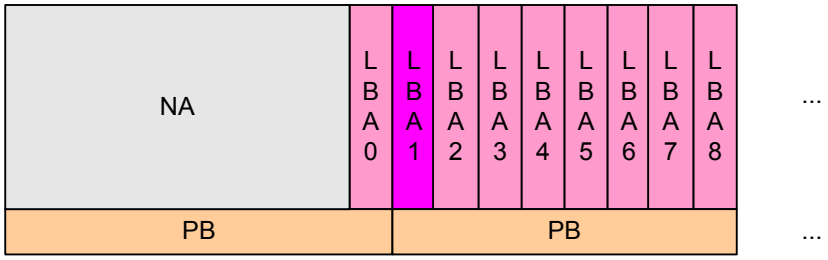

Key:
LBA n = logical block with LBA n
PB = physical block
NA= not accessible or addressable

The LOGICAL BLOCKS PER PHYSICAL BLOCK field and LOWEST ALIGNED LOGICAL BLOCK ADDRESS field are in the READ CAPACITY (16) data.

Page: 42

Number: 1 Author: Kevin_Marks Subject: Highlight Date: 8/11/2008 12:51:30 PM -07'00'

Figure 10 missing reference in text

Status
moverby Accepted 11/3/2008 11:16:50 PM
Author: moverby Subject: Sticky Note Date: 11/3/2008 11:16:48 PM

Multi-part table. Fix numbering

Number: 2 Author: LSI-Penokie Subject: Highlight Date: 8/19/2008 3:27:24 PM -07'00'

This << (part 3) >> should be << (part 3 of 3)

Status
moverby Accepted 10/20/2008 1:39:38 PM -07'00'

Number: 3 Author: Kevin_Marks Subject: Highlight Date: 8/11/2008 12:52:02 PM -07'00'

1:
s/b
1h:

Status
moverby Accepted 11/3/2008 4:54:16 PM

Number: 4 Author: Kevin_Marks Subject: Highlight Date: 8/11/2008 12:52:16 PM -07'00'

7:
s/b
7h:

Status
moverby Accepted 11/3/2008 4:54:23 PM

Number: 5 Author: Kevin_Marks Subject: Highlight Date: 8/11/2008 12:52:41 PM -07'00'

7:
s/b
7h:

Status
moverby Accepted 11/3/2008 4:54:27 PM

Number: 6 Author: Kevin_Marks Subject: Highlight Date: 8/11/2008 12:52:48 PM -07'00'

1:
s/b
1h:

Status
moverby Accepted 11/3/2008 4:54:31 PM

Number: 7 Author: Kevin_Marks Subject: Highlight Date: 8/11/2008 12:53:24 PM -07'00'

the READ CAPACITY (16) data.
s/b
the READ CAPACITY (16) command data.

Status
moverby Accepted 10/20/2008 1:40:01 PM -07'00'
Author: moverby Subject: Sticky Note Date: 10/20/2008 1:39:58 PM -07'00'

READ CAPACITY (16) parameter data

6 Command management model

6.1 Overview

A SATL may support the full task management model or the basic task management model as well as specific features of the task management model (e.g. SIMPLE and ORDERED task attributes) depending on the task management capabilities of the SATL and whether the SATL supports SATA native command queueing (NCQ) or the ATA Tagged Command Queuing (TCQ) feature set.

Page: 43

Number: 1 Author: LSI-Penokie Subject: Highlight Date: 8/19/2008 3:31:26 PM -07'00'

This << SATA native command queueing (NCQ) or the ATA Tagged Command Queuing (TCQ) feature set. >> should be << SATA NCQ or the ATA TCQ feature set. >> as the acronyms have already been defined.

Status
moverby Accepted 10/20/2008 1:40:23 PM -07'00'

Number: 2 Author: Kevin_Marks Subject: Highlight Date: 8/11/2008 1:18:03 PM -07'00'

native command queueing
s/b
Native Command Queueing

Status
moverby Accepted 10/20/2008 1:40:17 PM -07'00'

6.2 Multiple command processing

6.2.1 Comparison of SCSI task set management and ATA queuing

Some differences between SCSI task set management and ATA queuing methods are shown in table 6.

Table 6 — Comparison of SCSI task set management and ATA queuing methods

Feature [a]	SCSI	NCQ	TCQ
Ordering	Specified by task attributes (e.g. SIMPLE, ORDERED) associated with each command.	Always at the discretion of the device.	Always at the discretion of the device.
Queue Depth	Indeterminate	Fixed at 1 to 32 commands as reported in the ATA IDENTIFY DEVICE data word 75.	Fixed at 1 to 32 commands as reported in the ATA IDENTIFY DEVICE data word 75.
Queue full reporting	TASK SET FULL status	n/a	n/a
Queue full management	Device manages and indicates via TASK SET FULL status.	ATA host managed.	ATA host managed.
Queued commands	Task set management is applicable to all commands.	Limited to READ FPDMA QUEUED and WRITE FPDMA QUEUED commands.	Limited to READ DMA QUEUED, READ DMA QUEUED EXT, WRITE DMA QUEUED, WRITE DMA QUEUED EXT and WRITE DMA QUEUED FUA EXT commands, or a NOP command with a non-zero subcommand code.
Handling of non-queued commands received while one or more queued commands are being processed	n/a	Receipt of any command other than a READ FPDMA QUEUED command or a WRITE FPDMA QUEUED command is an error.	Receipt of any command other than a NOP command with a non-zero subcommand code, a SERVICE command, a READ DMA QUEUED command, a READ DMA QUEUED EXT command, a WRITE DMA QUEUED command, a WRITE DMA QUEUED EXT command, or a WRITE DMA QUEUED FUA EXT command is an error.
Error handling	Controlled with mode parameters.	Any error aborts all queued commands.	Any error aborts all queued commands.

[a] Queue is a term used to represent a SCSI task set or an ATA queue

Page: 44

Number: 1 Author: LSI-Penokie Subject: Highlight Date: 8/19/2008 3:33:32 PM -07'00'

This << Some differences >> should be << Examples of the differences >> or delete << some >>.

Status
moverby Accepted 10/20/2008 1:40:42 PM -07'00'

Author: moverby Subject: Sticky Note Date: 10/20/2008 1:40:39 PM -07'00'

Examples of the differences

Number: 2 Author: Kevin_Marks Subject: Sticky Note Date: 8/11/2008 1:23:21 PM -07'00'

Do we want to add a table note about NCQ Priority Bit?

Status
moverby Rejected 10/20/2008 3:41:14 PM -07'00'

Author: moverby Subject: Sticky Note Date: 10/20/2008 3:41:10 PM -07'00'

It was thought to add no value in the context of having a full translation of PRIO elsewhere in the document.

Number: 3 Author: HPQ-RElliott Subject: Highlight Date: 9/3/2008 9:42:24 AM -07'00'

After
queue

add .

Status
moverby Accepted 10/20/2008 1:41:14 PM -07'00'

6.2.2 Mapping of SCSI commands to ATA queued commands

A SATL that translates SCSI commands to an ATA device using NCQ or TCQ, whether or not the SATL also queues commands internally, shall either:

a) ~~indicate support for the basic task management model in standard INQUIRY data (i.e., the BQUE bit is set to one and CMDQUE bit is set to zero), and follow the rules for the basic task management model (see SAM-3); or~~
b) indicate support for the full task management model in standard INQUIRY data (~~i.e., the BQUE bit is set to zero and~~ CMDQUE bit is set to one), and set the QERR (i.e., queue error management) field of the Control mode page (see 10.1.5) as follows:
   A) a value of 01b if the SATL does not resend ATA queued commands aborted by the ATA device due to an error condition on any one of the ATA queued commands; or
   B) a value other than 01b if the SATL resends all other ATA queued commands (i.e., except the one in error) aborted by the ATA device due to an error condition on any one of the ATA queued commands.

For each SCSI command that the SATL translates to ATA queued commands (see 3.1.20), the SATL shall allocate an available tag value (e.g., for NCQ, the value corresponding to the position of a bit set to zero in the SActive register). The SATL shall maintain a mapping between allocated ATA queued command tags and the corresponding SCSI command identifier.

The SATL shall use the maximum queue depth supported by the ATA device (i.e., indicated by IDENTIFY DEVICE data word 75), and may either:

a) return a status of TASK SET FULL in response to a SCSI command sent to the corresponding emulated SCSI logical unit when the ATA device represented has the maximum number of ATA queued commands outstanding; or
b) queue the SCSI command and return TASK SET FULL status when the SATL exhausts internal queueing resources.

~~Editor's Note 1: The basic task management model and full task management mode in SAM-4 are gone.~~

6.2.3 Commands the SATL queues internally

~~If the translation of a SCSI command requires the SATL to send a non-queued command to the ATA device, then the SATL shall not send the non-queued command to the ATA device until all commands outstanding in the ATA device have returned command complete (i.e., with or without error).~~

If the ATA device corresponding to a logical unit has not returned command complete for all ATA commands the SATL has previously sent to the ATA device~~,~~ and the SATL receives a SCSI command that requires the SATL to send a non-queued command to the ATA device, the SATL shall:

a) suspend processing of the SCSI command, maintain the SCSI command in a task set~~,~~ and resume processing when the ATA device returns command complete for all ATA commands the SATL has previously sent to the ATA device;
b) return TASK SET FULL status for the SCSI command; or
c) return BUSY status for the SCSI command.

The SATL shall perform task management in accordance with the task management model (see SAM-3) indicated in standard INQUIRY data and the Control mode page (see SPC-3).

6.2.4 Command queuing with multiple I_T nexuses

In some configurations the SATL may receive SCSI requests from multiple I_T nexuses. If the SATL receives SCSI requests from multiple I_T nexuses (e.g., the configuration shown in figure 5), as specified in SAM-4, the command tags maintained in the SATL mapping of command tags to NCQ tags or TCQ tags shall be qualified by the I_T nexus from which the command was received. When translating from an NCQ tag or TCQ tag to the corresponding SCSI command tag, the SATL shall determine the correct I_T nexus using the qualification

Number: 1 Author: moverby Subject: Sticky Note Date: 10/20/2008 3:53:53 PM -07'00'

Insert new subclause (overview):
A SATL that translates SCSI commands to an ATA device using NCQ or TCQ should implement the SAM-4 task management functions. If the SAM-4 task management functions are not implemented, the SATL shall implement the basic task management model from SAM-3 (see xxxx).

The SATL may implement internal queuing regardless of the version of the SCSI architecture model supported.

Status
moverby Accepted 10/20/2008 3:54:44 PM -07'00'

Number: 2 Author: moverby Subject: Sticky Note Date: 9/9/2008 11:05:34 AM -07'00'

EdNote: Add new introductory paragraph here for a new subclause that covers SAM-3 behavior with the a/b list.

Status
moverby Accepted 10/20/2008 3:54:54 PM -07'00'

Number: 3 Author: Kevin_Marks Subject: Cross-Out Date: 8/11/2008 1:39:36 PM -07'00'

If following SAM-4

Status
moverby Rejected 9/9/2008 10:36:23 AM -07'00'

Author: moverby Subject: Sticky Note Date: 9/10/2008 1:43:53 PM -07'00'

Rejected in favor of changing this section to specify SAM-3 and SAM-4 behavior.

Number: 4 Author: Kevin_Marks Subject: Cross-Out Date: 8/11/2008 1:40:09 PM -07'00'

If following SAM-4

Status
moverby Rejected 9/9/2008 11:06:37 AM -07'00'

Author: moverby Subject: Sticky Note Date: 9/10/2008 1:44:22 PM -07'00'

Rejected in favor of changing this section to specify SAM-3 and SAM-4 behavior through separate letter ballot comment.

Number: 5 Author: Kevin_Marks Subject: Cross-Out Date: 8/11/2008 1:40:14 PM -07'00'

Status
moverby Accepted 10/20/2008 1:41:47 PM -07'00'

Number: 6 Author: Kevin_Marks Subject: Sticky Note Date: 8/11/2008 1:39:53 PM -07'00'

If we base SAT-2 off of SAM-4, then the basic task management model is obsolete. Additionally BQUE is also obsolete.

Status
moverby Rejected 10/20/2008 1:42:53 PM -07'00'

Author: moverby Subject: Sticky Note Date: 10/20/2008 1:42:50 PM -07'00'

Rejected in favor of adding a new subclause from editor's comments to differentiate between SAM-3 and SAM-4.

Number: 7 Author: Kevin_Marks Subject: Highlight Date: 8/11/2008 1:43:50 PM -07'00'

SCSI command identifier.

Add (see SAM-4).

Status
moverby Accepted 10/20/2008 1:43:26 PM -07'00'

Number: 8 Author: LSI-Besmer Subject: Note Date: 10/20/2008 3:58:25 PM -07'00'

This statement is over-reaching "shall use the maximum queue depth".

Status
moverby Accepted 11/3/2008 4:55:35 PM

Author: moverby Subject: Sticky Note Date: 11/3/2008 4:55:31 PM

Replacing with should

Number: 9 Author: Kevin_Marks Subject: Highlight Date: 8/11/2008 1:44:29 PM -07'00'

by IDENTIFY DEVICE data word 75),
s/b
by ATA IDENTIFY DEVICE data word 75),

Status
moverby Accepted 10/20/2008 1:43:30 PM -07'00'

Number: 10 Author: bmartin Subject: Cross-Out Date: 9/4/2008 1:06:11 AM -07'00'

Editor's Note 1: The basic task management model and full task management mode in SAM-4 are gone.

Status
moverby Accepted 9/9/2008 11:07:52 AM -07'00'

Number: 11 Author: Kevin_Marks Subject: Sticky Note Date: 8/11/2008 1:45:31 PM -07'00'

Remove Editor's note.

Status
moverby Accepted 10/20/2008 1:44:16 PM -07'00'

Number: 12 Author: moverby Subject: Cross-Out Date: 10/20/2008 4:21:27 PM -07'00'

Status
moverby Accepted 10/20/2008 4:21:33 PM -07'00'

Number: 13 Author: moverby Subject: Highlight Date: 10/20/2008 4:25:33 PM -07'00'

Replace with:

If the translation of a SCSI command requires the SATL to send a non-queued command to the ATA device, then the SATL shall:

Comments from page 45 continued on next page

6.2.2 Mapping of SCSI commands to ATA queued commands

A SATL that translates SCSI commands to an ATA device using NCQ or TCQ, whether or not the SATL also queues commands internally, shall either:

~~a) indicate support for the basic task management model in standard INQUIRY data (i.e., the BQUE bit is set to one and CMDQUE bit is set to zero), and follow the rules for the basic task management model (see SAM-3); or~~

b) indicate support for the full task management model in standard INQUIRY data (~~i.e., the BQUE bit is set to zero and~~ CMDQUE bit is set to one)~~,~~ and set the QERR (i.e., queue error management) field of the Control mode page (see 10.1.5) as follows:
   A) a value of 01b if the SATL does not resend ATA queued commands aborted by the ATA device due to an error condition on any one of the ATA queued commands; or
   B) a value other than 01b if the SATL resends all other ATA queued commands (i.e., except the one in error) aborted by the ATA device due to an error condition on any one of the ATA queued commands.

For each SCSI command that the SATL translates to ATA queued commands (see 3.1.20), the SATL shall allocate an available tag value (e.g., for NCQ, the value corresponding to the position of a bit set to zero in the SActive register). The SATL shall maintain a mapping between allocated ATA queued command tags and the corresponding SCSI command identifier.

The SATL shall use the maximum queue depth supported by the ATA device (i.e., indicated by IDENTIFY DEVICE data word 75), and may either:

a) return a status of TASK SET FULL in response to a SCSI command sent to the corresponding emulated SCSI logical unit when the ATA device represented has the maximum number of ATA queued commands outstanding; or
b) queue the SCSI command and return TASK SET FULL status when the SATL exhausts internal queueing resources.

~~Editor's Note 1: The basic task management model and full task management mode in SAM-4 are gone.~~

6.2.3 Commands the SATL queues internally

~~If the translation of a SCSI command requires the SATL to send a non-queued command to the ATA device, then the SATL shall not send the non-queued command to the ATA device until all commands outstanding in the ATA device have returned command complete (i.e., with or without error).~~

If the ATA device corresponding to a logical unit has not returned command complete for all ATA commands the SATL has previously sent to the ATA device, and the SATL receives a SCSI command that requires the SATL to send a non-queued command to the ATA device, the SATL shall:

a) suspend processing of the SCSI command, maintain the SCSI command in a task set, and resume processing when the ATA device returns command complete for all ATA commands the SATL has previously sent to the ATA device;
b) return TASK SET FULL status for the SCSI command; or
c) return BUSY status for the SCSI command.

The SATL shall perform task management in accordance with the task management model (see SAM-3) indicated in standard INQUIRY data and the Control mode page (see SPC-3).

6.2.4 Command queuing with multiple I_T nexuses

In some configurations the SATL may receive SCSI requests from multiple I_T nexuses. If the SATL receives SCSI requests from multiple I_T nexuses (e.g., the configuration shown in figure 5), as specified in SAM-4, the command tags maintained in the SATL mapping of command tags to NCQ tags or TCQ tags shall be qualified by the I_T nexus from which the command was received. When translating from an NCQ tag or TCQ tag to the corresponding SCSI command tag, the SATL shall determine the correct I_T nexus using the qualification

Status
moverby Accepted 10/20/2008 4:25:04 PM -07'00'

Number: 14 Author: Kevin_Marks Subject: Cross-Out Date: 8/11/2008 1:46:53 PM -07'00'

Status
moverby Rejected 10/20/2008 4:25:48 PM -07'00'

Author: moverby Subject: Sticky Note Date: 10/20/2008 4:25:45 PM -07'00'

Rejected for rewrite of this paragraph.

Number: 15 Author: Kevin_Marks Subject: Cross-Out Date: 8/11/2008 1:47:29 PM -07'00'

Status
moverby Accepted 10/20/2008 1:46:24 PM -07'00'

Number: 16 Author: bmartin Subject: Comment on Text Date: 9/4/2008 1:09:21 AM -07'00'

do we also need to state that no additional commands shall be queued to the ATA device until the non-queued command has been sent to and a response received from the ATA device?

Status
moverby Rejected 11/4/2008 10:02:03 AM

Author: moverby Subject: Sticky Note Date: 11/4/2008 10:01:59 AM

Rejected as being covered (Nov WG meeting) - Bill agreed.

Number: 17 Author: Kevin_Marks Subject: Highlight Date: 8/11/2008 1:49:46 PM -07'00'

(see SAM-3)
s/b
(see SAM-4)

Status
moverby Accepted 11/3/2008 11:17:08 PM

Number: 18 Author: Kevin_Marks Subject: Highlight Date: 8/11/2008 1:50:03 PM -07'00'

(see SPC-3).
s/b
(see SPC-4).

Status
moverby Accepted 11/3/2008 11:17:12 PM

Number: 19 Author: Kevin_Marks Subject: Highlight Date: 8/11/2008 1:53:57 PM -07'00'

"SAM-4, the command tags maintained in the SATL mapping of command tags to NCQ tags or TCQ tags"
s/b
"SAM-4, the command identifiers maintained in the SATL mapping of command identifers to NCQ tags or TCQ tags"

Status
moverby Accepted 10/20/2008 1:47:22 PM -07'00'

Number: 20 Author: Kevin_Marks Subject: Highlight Date: 8/11/2008 1:54:44 PM -07'00'

"corresponding SCSI command tag, the"
s/b
"corresponding SCSI command identifer, the"

Status
moverby Accepted 10/20/2008 1:47:27 PM -07'00'

information associated with the SCSI command tag. The SATL may return TASK SET FULL even if the ATA device has available NCQ tags or TCQ tags in order to maintain tags available for other I_T nexuses.

6.2.5 Collateral abort with queued commands

Error conditions with outstanding commands to an ATA device terminate all outstanding ATA commands being processed by the ATA device. An ATA host determines the status and error for each outstanding ATA queued command affected by the error condition and which ATA command(s) caused the error(s) (see ATA8-ACS or SATA-2.6). The SATL shall process aborted ATA commands as shown in table 7.

Table 7 — SATL processing of ATA commands aborted by ATA collateral abort

Association between the aborted ATA command and the ATA command that caused the error		Value of the QERR field set in the Control mode page	Method applied by the SATL for processing the aborted ATA command
I_T_L_Q nexus	I_T nexus		
same		00b	The SATL shall terminate the affected I_T_L_Q nexus with CHECK CONDITION status with the sense key and the additional sense code set according to the reported ATA error as described in clause 11.
		01b	
different	same	01b	The SATL shall terminate the affected I_T_L_Q nexus, but the SATL shall neither return status for the I_T_L_Q nexus affected by the aborted ATA command, nor retry the aborted ATA command.
		00b	The SATL shall resend the ATA command and continue processing the corresponding I_T_L_Q nexus.
different		00b	
		01b	The SATL shall terminate the affected I_T_L_Q nexus and establish a unit attention condition (see SAM-4) for the affected initiator port with the additional sense code set to COMMANDS CLEARED BY ANOTHER INITIATOR.

6.3 Command Priority

A SATL that supports SATA native command queuing (NCQ) feature set may also support the SAM-4 Command Priority ~~feature~~. SAM-4 Command Priority supports 16 priorities (0-15), whereas SATA NCQ only supports 2 priorities via the PRIO bits in the READ FPDMA QUEUED and WRITE FPDMA QUEUED commands. The SATL shall translate SAM-4 Command Priorities to SATA NCQ priority as shown in Table 8.

Table 8 — Command Priority to NCQ PRIO Mapping

SAM-4 Command Priority	SATA NCQ PRIO
0	0
1 - 3	1
4 - 15	0

Number: 1 Author: Kevin_Marks Subject: Highlight Date: 8/11/2008 1:55:58 PM -07'00'
SCSI command tag.
s/b
SCSI command identifier.

Status
moverby Accepted 10/20/2008 1:50:15 PM -07'00'

Number: 2 Author: Kevin_Marks Subject: Highlight Date: 8/11/2008 1:56:39 PM -07'00'
return TASK SET FULL even
s/b
return TASK SET FULL status even

Status
moverby Accepted 10/20/2008 1:50:10 PM -07'00'

Number: 3 Author: moverby Subject: Highlight Date: 10/20/2008 4:54:31 PM -07'00'
s/b Method applied by the SATL for processing ATA commands aborted by ATA collateral abort

Status
moverby Accepted 10/20/2008 4:54:29 PM -07'00'

Number: 4 Author: moverby Subject: Inserted Text Date: 11/4/2008 9:24:55 AM
command for the

Status
moverby Accepted 11/4/2008 9:25:10 AM
Author: moverby Subject: Sticky Note Date: 11/4/2008 9:25:27 AM
Added comment during review at November WG meeting

Number: 5 Author: bmartin Subject: Highlight Date: 9/4/2008 12:01:21 AM -07'00'
The SATL shall resend the ATA command and continue processing the corresponding I_T_L_Q nexus.

s/b

The SATL shall terminate the affected I_T_L_Q nexus with CHECK CONDITION status with the sense key and the additional sense code set according to the reported ATA error as described in clause 11, and the SATL shall resend the aborted ATA command.

Status
moverby Rejected 10/20/2008 4:54:44 PM -07'00'
Author: moverby Subject: Sticky Note Date: 10/20/2008 4:55:03 PM -07'00'
Rejected in favor of changing column title.

Number: 6 Author: Kevin_Marks Subject: Highlight Date: 8/11/2008 2:02:20 PM -07'00'
6.3 command Priority
s/b
6.3 Command Priority

Status
moverby Accepted 10/20/2008 1:51:34 PM -07'00'

Number: 7 Author: HPQ-RElliott Subject: Highlight Date: 9/3/2008 9:42:24 AM -07'00'
command Priority
s/b
Command priority

Status
moverby Accepted 10/20/2008 1:51:31 PM -07'00'

Number: 8 Author: Kevin_Marks Subject: Highlight Date: 8/11/2008 1:59:13 PM -07'00'
native command queuing
s/b
Native Command Queuing

Status
moverby Accepted 10/20/2008 1:52:10 PM -07'00'

Number: 9 Author: Kevin_Marks Subject: Highlight Date: 8/11/2008 2:03:10 PM -07'00'
SAM-4
s/b
SCSI

Status
moverby Accepted 10/20/2008 1:51:45 PM -07'00'

Number: 10 Author: Kevin_Marks Subject: Cross-Out Date: 8/11/2008 2:01:49 PM -07'00'

Status
moverby Accepted 10/20/2008 1:54:07 PM -07'00'

Number: 11 Author: Kevin_Marks Subject: Highlight Date: 8/11/2008 2:03:19 PM -07'00'
SAM-4
s/b
SCSI

Status
moverby Accepted 10/20/2008 1:54:45 PM -07'00'

Number: 12 Author: HPQ-RElliott Subject: Highlight Date: 9/3/2008 9:42:24 AM -07'00'
Command Priority
s/b
lowercase

Comments from page 46 continued on next page

information associated with the SCSI command tag. The SATL may return TASK SET FULL even if the ATA device has available NCQ tags or TCQ tags in order to maintain tags available for other I_T nexuses.

6.2.5 Collateral abort with queued commands

Error conditions with outstanding commands to an ATA device terminate all outstanding ATA commands being processed by the ATA device. An ATA host determines the status and error for each outstanding ATA queued command affected by the error condition and which ATA command(s) caused the error(s) (see ATA8-ACS or SATA-2.6). The SATL shall process aborted ATA commands as shown in table 7.

Table 7 — SATL processing of ATA commands aborted by ATA collateral abort

Association between the aborted ATA command and the ATA command that caused the error		Value of the QERR field set in the Control mode page	Method applied by the SATL for processing the aborted ATA command
I_T_L_Q nexus	I_T nexus		
same		00b	The SATL shall terminate the affected I_T_L_Q nexus with CHECK CONDITION status with the sense key and the additional sense code set according to the reported ATA error as described in clause 11.
		01b	
different	same	01b	The SATL shall terminate the affected I_T_L_Q nexus, but the SATL shall neither return status for the I_T_L_Q nexus affected by the aborted ATA command, nor retry the aborted ATA command.
		00b	The SATL shall resend the ATA command and continue processing the corresponding I_T_L_Q nexus.
different		00b	
		01b	The SATL shall terminate the affected I_T_L_Q nexus and establish a unit attention condition (see SAM-4) for the affected initiator port with the additional sense code set to COMMANDS CLEARED BY ANOTHER INITIATOR.

6.3 command Priority

A SATL that supports SATA native command queuing (NCQ) feature set may also support the SAM-4 Command Priority ~~feature~~. SAM-4 Command Priority supports ~~16~~ priorities (0-15), whereas SATA NCQ only supports 2 priorities via the PRIO bits in the READ FPDMA QUEUED and WRITE FPDMA QUEUED commands. The SATL shall translate SAM-4 Command Priorities to SATA NCQ priority as shown in Table 8.

Table 8 — Command Priority to NCQ PRIO Mapping

SAM-4 Command Priority	SATA NCQ PRIO
0	0
1 - 3	1
4 - 15	0

Status
moverby Accepted 10/20/2008 1:54:36 PM -07'00'

Number: 13 Author: LSI-Penokie Subject: Highlight Date: 8/19/2008 4:02:15 PM -07'00'

This << 16 priorities (0-15), >> should be << 16 priorities (i.e., 0..15), >>

Status
moverby Accepted 10/20/2008 1:54:18 PM -07'00'

Number: 14 Author: Kevin_Marks Subject: Highlight Date: 8/11/2008 2:04:41 PM -07'00'

"READ FPDMA QUEUED and WRITE FPDMA QUEUED commands."
s/b
"ATA READ FPDMA QUEUED command and ATA WRITE FPDMA QUEUED command."

Status
moverby Accepted 10/20/2008 1:55:05 PM -07'00'

Number: 15 Author: Kevin_Marks Subject: Highlight Date: 8/11/2008 2:03:51 PM -07'00'

bits
s/b
bit

Status
moverby Accepted 10/20/2008 1:54:58 PM -07'00'

Number: 16 Author: Kevin_Marks Subject: Highlight Date: 8/11/2008 2:04:52 PM -07'00'

SAM-4
s/b
SCSI

Status
moverby Accepted 10/20/2008 1:55:19 PM -07'00'

Number: 17 Author: HPQ-RElliott Subject: Highlight Date: 9/3/2008 9:42:24 AM -07'00'

Command Priorities
s/b
lowercase

Status
moverby Accepted 10/20/2008 1:55:16 PM -07'00'

Number: 18 Author: HPQ-RElliott Subject: Note Date: 9/3/2008 9:42:24 AM -07'00'

delete whitespace above table 8

Status
moverby Accepted 10/20/2008 1:55:23 PM -07'00'

Number: 19 Author: Kevin_Marks Subject: Highlight Date: 8/11/2008 2:05:48 PM -07'00'

SAM-4
s/b
SCSI

Status
moverby Accepted 10/20/2008 1:55:43 PM -07'00'

Number: 20 Author: Kevin_Marks Subject: Highlight Date: 8/11/2008 2:06:34 PM -07'00'

SATA NCQ PRIO
s/b
SATA NCQ PRIO bit

or even better, just PRIO bit.

Status
moverby Accepted 10/20/2008 1:57:36 PM -07'00'
Author: moverby Subject: Sticky Note Date: 10/20/2008 1:57:33 PM -07'00'
SATA NCQ PRIO bit

Number: 21 Author: HPQ-RElliott Subject: Note Date: 9/3/2008 9:42:24 AM -07'00'

Consider adding (i.e.,) to confirm the meaning of the priority values in SCSI and ATA:

0h (i.e., vendor-specific) | 0 (i.e., normal priority)
1h (i.e., highest priority) | 1 (i.e., high priority)
Fh (i.e., lowest priority) | 0 (i.e., normal priority)

Status
moverby Rejected 10/20/2008 4:55:46 PM -07'00'
Author: moverby Subject: Sticky Note Date: 10/20/2008 4:55:42 PM -07'00'
Rejected after considering. Would add additional confusion and was not needed.

Number: 22 Author: Kevin_Marks Subject: Highlight Date: 8/11/2008 2:05:06 PM -07'00'

0h

Status
moverby Accepted 10/20/2008 4:55:56 PM -07'00'

Number: 23 Author: Kevin_Marks Subject: Highlight Date: 8/11/2008 2:05:16 PM -07'00'

1h - 3h

Status
moverby Accepted 10/20/2008 4:56:01 PM -07'00'

Number: 24 Author: LSI-Penokie Subject: Highlight Date: 8/19/2008 4:02:38 PM -07'00'

1..3

Status
moverby Accepted 10/20/2008 1:58:01 PM -07'00'

Number: 25 Author: Kevin_Marks Subject: Highlight Date: 8/11/2008 2:05:27 PM -07'00'

4h - Fh

Status
moverby Accepted 10/20/2008 4:56:06 PM -07'00'

Comments from page 46 continued on next page

information associated with the SCSI command tag. The SATL may return TASK SET FULL even if the ATA device has available NCQ tags or TCQ tags in order to maintain tags available for other I_T nexuses.

6.2.5 Collateral abort with queued commands

Error conditions with outstanding commands to an ATA device terminate all outstanding ATA commands being processed by the ATA device. An ATA host determines the status and error for each outstanding ATA queued command affected by the error condition and which ATA command(s) caused the error(s) (see ATA8-ACS or SATA-2.6). The SATL shall process aborted ATA commands as shown in table 7.

Table 7 — SATL processing of ATA commands aborted by ATA collateral abort

Association between the aborted ATA command and the ATA command that caused the error		Value of the QERR field set in the Control mode page	Method applied by the SATL for processing the aborted ATA command
I_T_L_Q nexus	I_T nexus		
same		00b	The SATL shall terminate the affected I_T_L_Q nexus with CHECK CONDITION status with the sense key and the additional sense code set according to the reported ATA error as described in clause 11.
		01b	
different	same	01b	The SATL shall terminate the affected I_T_L_Q nexus, but the SATL shall neither return status for the I_T_L_Q nexus affected by the aborted ATA command, nor retry the aborted ATA command.
		00b	The SATL shall resend the ATA command and continue processing the corresponding I_T_L_Q nexus.
different		00b	
		01b	The SATL shall terminate the affected I_T_L_Q nexus and establish a unit attention condition (see SAM-4) for the affected initiator port with the additional sense code set to COMMANDS CLEARED BY ANOTHER INITIATOR.

6.3 command Priority

A SATL that supports SATA native command queuing (NCQ) feature set may also support the SAM-4 Command Priority ~~feature~~. SAM-4 Command Priority supports 16 priorities (0-15), whereas SATA NCQ only supports 2 priorities via the PRIO bits in the READ FPDMA QUEUED and WRITE FPDMA QUEUED commands. The SATL shall translate SAM-4 Command Priorities to SATA NCQ priority as shown in Table 8.

Table 8 — Command Priority to NCQ PRIO Mapping

SAM-4 Command Priority	SATA NCQ PRIO
0	0
1 - 3	1
4 - 15	0

Number: 26 Author: LSI-Penokie Subject: Highlight Date: 8/19/2008 4:02:48 PM -07'00'

4..15

Status

moverby Accepted 10/20/2008 1:58:05 PM -07'00'

6.4 Task management functions

6.4.1 Task management functions overview

6.4 describes the translation of SCSI task management functions to ATA equivalents.

6.4.2 Aborting ATA queued commands

Some task management functions processed by the SATL may result in ATA commands aborted by ATA collateral abort (see 3.1.8) affecting an I_T_L_Q nexus other than the I_T_L_Q nexus(es) specified in the task management function request. The subclause defining the translation for each task management function defines how the SATL processes the I_T_L_Q nexuses affected by the task management function.

Processing some task management functions requires the SATL to abort one or more ATA commands being processed by an ATA device.

SATL shall abort an ATA queued command being processed by an ATA device by sending an ATA CHECK POWER MODE command to the ATA device.

NOTE 5 - The ATA CHECK POWER MODE command is used to abort ATA queued commands because it is an ATA non-queued command that does not transfer data. The ATA CHECK POWER MODE command does not affect ATA volatile settings.

6.4.3 Aborting ATA non-queued commands

To abort an ATA non-queued command the SATL shall:

a) send an ATA software reset to the ATA device; and
b) restore ATA volatile settings (see 3.1.25) to values consistent with current mode parameter settings.

6.4.4 ABORT TASK

The service request for the ABORT TASK task management function is (see SAM-4):

Service Response = ABORT TASK (IN (I_T_L_Q nexus)).

If no ATA commands associated with the I_T_L_Q nexus specified in the ABORT TASK task management function are outstanding to the ATA device, then the SATL shall abort the command for the specified I_T_L_Q nexus from the SATL internal context and respond to the ABORT TASK task management function with a service response of FUNCTION COMPLETE (see SAM-4).

If the ATA device is processing one or more ATA commands that are related to the specified I_T_L_Q nexus, then the SATL shall either:

a) allow the ATA command(s) to complete as follows:
   1) wait until the ATA device returns command complete for the ATA command(s);
   2) if the completed ATA command completes processing of the specified I_T_L_Q nexus, then return completion status for the I_T_L_Q nexus; and
   3) return a service response of FUNCTION COMPLETE for the ABORT TASK task management function regardless of whether or not completion status was returned for the I_T_L_Q nexus;

   or
b) abort the ATA command(s) (see 6.4.2) for the specified I_T_L_Q nexus and respond to the ABORT TASK task management function with a service response of FUNCTION COMPLETE.

If aborting the ATA commands related to the specified I_T_L_Q nexus results in one or more other ATA commands being aborted by ATA collateral abort (see 3.1.8), then the SATL shall:

a) if the SATL supports ATA abort retry (see 3.1.7), then re-send all ATA commands aborted by ATA collateral abort (see 3.1.8) and continue processing the affected I_T_L_Q nexuses; or
b) if the SATL does not support ATA abort retry, then for each I_T nexus affected by an ATA command aborted by ATA collateral abort:

Page: 47

Number: 1 Author: bmartin Subject: Comment on Text Date: 9/4/2008 1:16:53 AM -07'00'

Don't put a self reference in here.

This subclause

Status

moverby Accepted 10/20/2008 1:58:31 PM -07'00'

Number: 2 Author: HPQ-RElliott Subject: Note Date: 9/3/2008 9:42:24 AM -07'00'

6.4 needs to mention how TMFs for ATAPI devices are handled or not handled.

Just defining that all TMFs are replied to with FUNCTION REJECTED would suffice.

Status

moverby Rejected 10/20/2008 4:56:58 PM -07'00'

Author: moverby Subject: Sticky Note Date: 10/20/2008 4:56:53 PM -07'00'

Rejected as the ATAPI annex covers all TMF's as being unspecified (which would allow the FUNCTION REJECTED)

Number: 3 Author: LSI-Penokie Subject: Highlight Date: 8/19/2008 4:06:49 PM -07'00'

Which of the 300 subclauses in this standard is being referenced here?

Status

moverby Accepted 10/20/2008 1:59:28 PM -07'00'

Author: moverby Subject: Sticky Note Date: 10/20/2008 1:59:25 PM -07'00'

Add cross reference - Subclause xx.xx.xx defines...

Number: 4 Author: bmartin Subject: Highlight Date: 9/4/2008 1:18:13 AM -07'00'

affected

s/b

specified

Status

moverby Rejected 10/20/2008 2:00:38 PM -07'00'

Author: moverby Subject: Sticky Note Date: 10/20/2008 2:00:34 PM -07'00'

The TMF does not specific an I_T_I_Q nexus. Affected is correct because this deals with how to handle the byproduct of the abort on other ITLQ.

Number: 5 Author: bmartin Subject: Highlight Date: 9/9/2008 10:21:37 AM -07'00'

an ATA CHECK POWER MODE command to the ATA device

An alternative that gives more information is READ LOG EXT (log page 0x10). This additionally gets status information for the ATA command that is aborted.

suggest rewording to CHECK POWER MODE command to the ATA device or READ LOG EXT (log page 0x10) to the ATA device.

Status

moverby Accepted 10/20/2008 2:01:07 PM -07'00'

Author: moverby Subject: Sticky Note Date: 9/9/2008 1:55:53 PM -07'00'

Add words following CHECK POWER MODE to note that if any NCQ command is outstanding this shall be followed by a READ LOG EXT (address 10) command.

Number: 6 Author: LSI-Besmer Subject: Note Date: 8/26/2008 9:00:23 PM -07'00'

Is it always possible to send this?

Status

moverby Rejected 10/20/2008 2:01:39 PM -07'00'

Author: moverby Subject: Sticky Note Date: 10/20/2008 2:01:35 PM -07'00'

Rejected. This will be covered in the handling of the Emulex comment / rewrite of this section.

Number: 7 Author: HPQ-RElliott Subject: Note Date: 9/3/2008 9:42:24 AM -07'00'

Section 6.4.3 probably also applies to ATAPI devices.

Status

moverby Rejected 10/20/2008 2:02:20 PM -07'00'

Author: moverby Subject: Sticky Note Date: 10/20/2008 2:02:16 PM -07'00'

Probably so. But I don't see any language here that implies otherwise.

Author: moverby Subject: Sticky Note Date: 10/20/2008 4:57:37 PM -07'00'

As well 3.1.20 allows for this as PACKET falls under ATA non-queued command.

1) terminate all but one of the SCSI commands without returning a function result; and
2) complete processing of the remaining SCSI command by returning CHECK CONDITION status with the sense key set to UNIT ATTENTION and additional sense code set to COMMANDS CLEARED BY DEVICE SERVER.

6.4.5 ABORT TASK SET

The service request for the ABORT TASK SET task management function (see SAM-4) is:

Service Response = ABORT TASK SET (IN (I_T_L nexus)).

If the ATA device is not processing ATA commands for SCSI commands associated with the specified I_T_L nexus, then the SATL shall abort all commands for the specified I_T_L nexus from the SATL internal context and respond to the ABORT TASK SET task management function with a service response of FUNCTION COMPLETE.

If the ATA device is processing any ATA commands related to the specified I_T_L nexus, then the SATL shall either:

a) allow the ATA command(s) to complete as follows:
   1) wait until the ATA device returns command complete for the ATA command(s);
   2) if the completed ATA command completes processing a SCSI command in the task set, return completion status for the SCSI command; and
   3) after all ATA commands return completion status, return a service response of FUNCTION COMPLETE for the ABORT TASK SET task management function;

or

b) abort outstanding ATA command(s) (see 6.4.2) for the specified I_T_L nexus, and respond to the ABORT TASK SET task management function with a service response of FUNCTION COMPLETE.

If aborting ATA commands for the specified I_T_L nexus results in ATA commands aborted by ATA collateral abort (see 3.1.8) that are related to processing SCSI commands in an I_T_L nexus other than the specified I_T_L nexus, then:

a) if the SATL supports ATA abort retry (see 3.1.7), then the SATL shall re-send all ATA commands aborted by ATA collateral abort and continue processing of the affected I_T_L_Q nexuses; or
b) if the SATL does not support ATA abort retry, then for each I_T_L nexus other than the specified I_T_L nexus that had one or more SCSI commands affected due to ATA commands aborted by ATA collateral abort, the SATL shall abort all commands for each affected I_T_L nexus and establish a UNIT ATTENTION condition with the additional sense code set to COMMANDS CLEARED BY ANOTHER INITIATOR.

NOTE 6 - A SATL that does not support ATA abort retry (see 3.1.7) is not able to comply with the SAM-4 requirement that ABORT TASK SET not abort commands other than those in the specified I_T_L nexus.

6.4.6 CLEAR ACA

The service request for the CLEAR ACA task management function (see SAM-4) is:

Service Response = CLEAR ACA (IN (I_T_L nexus)).

The SATL shall process the CLEAR ACA task management function as defined in SAM-4.

NOTE 7 - The SATL responds to a CLEAR ACA task management function with a service response of FUNCTION REJECTED, as the SATL reports a NORMACA bit set to zero in standard INQUIRY data (see 8.1.2).

6.4.7 CLEAR TASK SET

The service request for the CLEAR TASK SET task management function (see SAM-4) is:

Service Response = CLEAR TASK SET (IN (I_T_L nexus)).

Page: 48

Number: 1 Author: LSI-Penokie Subject: Highlight Date: 8/19/2008 4:18:10 PM -07'00'

This should be << terminate >> as the command ends with at CC.

Status
moverby Accepted 10/20/2008 2:02:36 PM -07'00'

Number: 2 Author: HPQ-RElliott Subject: Highlight Date: 9/3/2008 9:42:24 AM -07'00'

"shall process the CLEAR ACA task management function as defined in SAM-4" is misleading, because NOTE 7 then says that the only option is to reject it.

Status
moverby Accepted 10/20/2008 5:03:00 PM -07'00'

Author: moverby Subject: Sticky Note Date: 10/20/2008 5:02:57 PM -07'00'

Accepted by deleting this sentence and promoting note below (with wording changes).

Number: 3 Author: moverby Subject: Highlight Date: 10/20/2008 5:02:10 PM -07'00'

Promote from note. s/b The SATL shall respond to a CLEAR ACA task management function with a service response of FUNCTION REJECTED.

Status
moverby Accepted 10/20/2008 5:03:05 PM -07'00'

Number: 4 Author: HPQ-RElliott Subject: Highlight Date: 9/3/2008 9:42:24 AM -07'00'

CLEAR ATA
s/b
CLEAR ACA

Status
moverby Accepted 10/20/2008 2:03:17 PM -07'00'

Number: 5 Author: bmartin Subject: Highlight Date: 9/4/2008 1:23:01 AM -07'00'

ATA

s/b

ACA

Status
moverby Accepted 10/20/2008 2:03:09 PM -07'00'

~~If the SATL indicates support for the full task management model (see 6.2.2), then~~ the SATL shall process the CLEAR TASK SET task management function in accordance with a single task set that includes SCSI commands for all I_T_L nexuses (i.e., the TST field in the Control mode page is set to 000h, see 10.1.5).

If the ATA device is processing any ATA commands, then the SATL shall:

a) abort all outstanding ATA command(s);
b) abort all SCSI commands in the task set; and
c) respond to the CLEAR TASK SET task management function with a service response of FUNCTION COMPLETE.

If the SATL aborts commands in the task set for an I_T_L nexus other than the specified I_T_L nexus, then for each other I_T_L nexus, the SATL shall establish a unit attention condition with the additional sense code set to COMMANDS CLEARED BY ANOTHER INITIATOR.

6.4.8 LOGICAL UNIT RESET

The service request for the LOGICAL UNIT RESET task management function (see SAM-4) is:

Service Response = LOGICAL UNIT RESET (IN (I_T_L nexus)).

The SATL shall:

1) reset the ATA device as follows:
   1) optionally send an ATA software reset (see 3.1.23) to the ATA device; and
   2) if the ATA software reset is not successful or not sent, then send an ATA hardware reset (see 3.1.13) to the ATA device;

NOTE 8 - It is vendor-specific how the SATL determines if the ATA software reset is successful.

2) abort all commands in the task set from the SATL internal context;
3) restore ATA volatile settings (see 3.1.25) to values consistent with the emulation of saved or default values of mode parameters, log parameters, and INQUIRY data (see SPC-3); and
4) return a service response of FUNCTION COMPLETE for the LOGICAL UNIT RESET task management function.

NOTE 9 - If more than one PATA device is present on a PATA bus, issuing an ATA software reset causes both devices to be reset.

6.4.9 QUERY TASK

The service request for the QUERY TASK task management function (see SAM-4) is:

Service Response = QUERY TASK (IN (I_T_L_Q nexus)).

If the SATL supports the QUERY TASK task management function, the SATL shall return a service response of FUNCTION SUCCEEDED if the specified I_T_L_Q nexus is in the task set, or the SATL shall return a service response of FUNCTION COMPLETE if the specified I_T_L_Q nexus is not in the task set.

If the SATL does not support the QUERY TASK task management function the SATL shall return a service response of FUNCTION REJECTED.

6.4.10 Obsolete reset task management functions

The obsolete TARGET RESET task management function is sometimes used by a SCSI application client to cause a hard reset (i.e., similar to a power-on condition) for each logical unit of a specified target device. The SATL may process the TARGET RESET task management function by issuing an ATA hardware reset (see 3.1.13) to the ATA device(s) associated with the target device.

Number: 1 Author: Kevin_Marks Subject: Cross-Out Date: 8/11/2008 2:27:09 PM -07'00'

Status
moverby Rejected 10/20/2008 2:04:01 PM -07'00'
Author: moverby Subject: Sticky Note Date: 10/20/2008 2:03:57 PM -07'00'
Rejected as we are still describing SAM-3 behavior.

Number: 2 Author: Kevin_Marks Subject: Sticky Note Date: 10/20/2008 5:03:40 PM -07'00'
Is the reasoning for the addition of the _L on most of the tmf text, that the SATL may not be considered the device server? In each of these the _L is always the same.

Status
moverby Rejected 11/4/2008 10:07:27 AM
Author: moverby Subject: Sticky Note Date: 11/4/2008 10:07:24 AM
WG decided that the _L is needed. (Nov WG)

Number: 3 Author: Kevin_Marks Subject: Highlight Date: 8/11/2008 2:32:01 PM -07'00'
(see SPC-3);
s/b
(see SPC-4);

Status
moverby Accepted 11/3/2008 11:17:17 PM
Number: 4 Author: HPQ-RElliott Subject: Note Date: 9/3/2008 9:42:24 AM -07'00'
6.4.8 should also mention establishing the unit attention condition defined in SAM-4

Status
moverby Accepted 10/20/2008 5:07:12 PM -07'00'
Author: moverby Subject: Sticky Note Date: 10/20/2008 5:07:09 PM -07'00'
Accepted with copying of language from I_T nexus reset from LSI (Besmer) 08-374 proposal.

Number: 5 Author: HPQ-RElliott Subject: Highlight Date: 9/3/2008 9:42:24 AM -07'00'
devices
s/b
PATA devices

Status
moverby Accepted 10/20/2008 2:06:51 PM -07'00'
Number: 6 Author: HPQ-RElliott Subject: Note Date: 9/9/2008 10:26:35 AM -07'00'
Add:
I_T NEXUS RESET

It should be similar to ABORT TASK SET

Note - Brad will write proposal to add (Query Task Set) as well

Status
moverby Accepted 10/20/2008 5:07:21 PM -07'00'
Author: moverby Subject: Sticky Note Date: 10/20/2008 5:07:34 PM -07'00'
Accepted with 08-374

Number: 7 Author: LSI-Penokie Subject: Highlight Date: 8/19/2008 4:32:36 PM -07'00'
This << Obsolete >> should be deleted.

Status
moverby Accepted 10/20/2008 2:07:02 PM -07'00'
Number: 8 Author: HPQ-RElliott Subject: Note Date: 9/3/2008 9:42:24 AM -07'00'
Add:
QUERY TASK SET

It should be similar to QUERY TASK, but reporting if any task is in the task set, not just a specific I_T_L_Q nexus.

Status
moverby Accepted 10/20/2008 5:07:47 PM -07'00'
Author: moverby Subject: Sticky Note Date: 10/20/2008 5:07:55 PM -07'00'
08-374

Number: 9 Author: LSI-Penokie Subject: Highlight Date: 8/19/2008 4:32:28 PM -07'00'
This << obsolete TARGET RESET task management function >> should be << TARGET RESET task management function (see SAM-2)>>

Status
moverby Accepted 10/20/2008 2:07:41 PM -07'00'
Number: 10 Author: HPQ-RElliott Subject: Note Date: 9/9/2008 10:28:40 AM -07'00'
Add:
QUERY ASYNCHRONOUS EVENT

to report any unit attention conditions that the SATL has established

Note - Brad will look at adding via proposal

Status
moverby Accepted 10/20/2008 5:08:08 PM -07'00'
Author: moverby Subject: Sticky Note Date: 10/20/2008 5:08:05 PM -07'00'
08-374

Comments from page 49 continued on next page

~~If the SATL indicates support for the full task management model (see 6.2.2), then~~ the SATL shall process the CLEAR TASK SET task management function in accordance with a single task set that includes SCSI commands for all I_T_L nexuses (i.e., the TST field in the Control mode page is set to 000h, see 10.1.5).

If the ATA device is processing any ATA commands, then the SATL shall:

a) abort all outstanding ATA command(s);
b) abort all SCSI commands in the task set; and
c) respond to the CLEAR TASK SET task management function with a service response of FUNCTION COMPLETE.

If the SATL aborts commands in the task set for an I_T_L nexus other than the specified I_T_L nexus, then for each other I_T_L nexus, the SATL shall establish a unit attention condition with the additional sense code set to COMMANDS CLEARED BY ANOTHER INITIATOR.

6.4.8 LOGICAL UNIT RESET

The service request for the LOGICAL UNIT RESET task management function (see SAM-4) is:

Service Response = LOGICAL UNIT RESET (IN (I_T_L nexus)).

The SATL shall:

1) reset the ATA device as follows:
   1) optionally send an ATA software reset (see 3.1.23) to the ATA device; and
   2) if the ATA software reset is not successful or not sent, then send an ATA hardware reset (see 3.1.13) to the ATA device;

NOTE 8 - It is vendor-specific how the SATL determines if the ATA software reset is successful.

2) abort all commands in the task set from the SATL internal context;
3) restore ATA volatile settings (see 3.1.25) to values consistent with the emulation of saved or default values of mode parameters, log parameters, and INQUIRY data (see SPC-3); and
4) return a service response of FUNCTION COMPLETE for the LOGICAL UNIT RESET task management function.

NOTE 9 - If more than one PATA device is present on a PATA bus, issuing an ATA software reset causes both devices to be reset.

6.4.9 QUERY TASK

The service request for the QUERY TASK task management function (see SAM-4) is:

Service Response = QUERY TASK (IN (I_T_L_Q nexus)).

If the SATL supports the QUERY TASK task management function, the SATL shall return a service response of FUNCTION SUCCEEDED if the specified I_T_L_Q nexus is in the task set, or the SATL shall return a service response of FUNCTION COMPLETE if the specified I_T_L_Q nexus is not in the task set.

If the SATL does not support the QUERY TASK task management function the SATL shall return a service response of FUNCTION REJECTED.

6.4.10 Obsolete reset task management functions

The obsolete TARGET RESET task management function is sometimes used by a SCSI application client to cause a hard reset (i.e., similar to a power-on condition) for each logical unit of a specified target device. The SATL may process the TARGET RESET task management function by issuing an ATA hardware reset (see 3.1.13) to the ATA device(s) associated with the target device.

6.5 CONTROL Byte

~~6.5.1 CONTROL byte overview~~

Table 9 describes SATL handling of the CDB CONTROL byte. See SAM-4 for CONTROL byte details.

Table 9 — CONTROL byte fields

Field	Description
Vendor specific	The SATL may use this field for vendor-specific purposes.
NACA	If set to one, the SATL shall terminate the command with CHECK CONDITION status with the sense key set to ILLEGAL REQUEST and the additional sense code set to INVALID FIELD IN CDB.
~~LINK~~	~~If set to one, the SATL shall terminate the command with CHECK CONDITION status with the sense key set to ILLEGAL REQUEST and the additional sense code set to INVALID FIELD IN CDB.~~

6.6 I_T nexus loss

The SATL may detect an I_T nexus loss event (see SAM-4). If the SATL detects an I_T nexus loss event the SATL handles the I_T nexus loss event differently depending on whether the SATL provides multiple I_T nexusus access to the emulated SCSI logical unit.

If the SATL does not provide multiple I_T nexusus access to the emulated SCSI logical unit, the SATL shall handle the I_T nexus loss as follows:

1) abort any outstanding ATA command(s) (see 6.4.2);
2) delete all commands in the task set from the SATL internal context; and
3) establish a unit attention condition for each affected I_T nexus with the additional sense code set to I_T NEXUS LOSS OCCURRED.

If the SATL provides multiple I_T nexusus access to the emulated SCSI logical unit, the SATL shall handle the I_T nexus loss as follows:

1) allow any outstanding ATA command(s) for each I_T nexus that is not lost to complete;
2) abort any remaining ATA command(s) (see 6.4.2 and 6.4.3);
3) delete all commands in the task set from the SATL internal context for commands associated with the I_T nexus that the I_T nexus loss event occured; and
4) establish a unit attention with the additional sense code set to I_T NEXUS LOSS OCCURRED for the SCSI initiator port associated with the I_T nexus that was lost.

Page: 50

Number: 1 Author: HPQ-RElliott Subject: Highlight Date: 9/3/2008 9:42:24 AM -07'00'

CONTROL Byte

The smallcaps are lost in the table of contents

Status
moverby Accepted 10/20/2008 2:08:06 PM -07'00'

Number: 2 Author: HPQ-RElliott Subject: Cross-Out Date: 9/3/2008 9:42:24 AM -07'00'

Delete this level:
6.5.1 CONTROL byte overview

since there is no 6.5.2.

Status
moverby Accepted 10/20/2008 2:08:13 PM -07'00'

Number: 3 Author: HPQ-RElliott Subject: Cross-Out Date: 9/3/2008 9:42:24 AM -07'00'

Delete

LINK
If set to one, the SATL shall terminate the command with CHECK CONDITION status with the sense key set to ILLEGAL REQUEST and the additional sense code set to INVALID FIELD IN CDB.

since it is obsolete in SAM-4

Status
moverby Accepted 9/9/2008 11:08:46 AM -07'00'

Number: 4 Author: Kevin_Marks Subject: Cross-Out Date: 8/11/2008 2:37:19 PM -07'00'

yeah, link is obsolete in SAM-4

Status
moverby Accepted 9/9/2008 11:08:37 AM -07'00'

Number: 5 Author: LSI-Besmer Subject: Note Date: 8/26/2008 9:12:51 PM -07'00'

How is this different from section 5.5?

Status
moverby Rejected 10/20/2008 5:11:21 PM -07'00'

Author: moverby Subject: Sticky Note Date: 10/20/2008 5:11:17 PM -07'00'

This is the upstream nexus loss. 5.5 is the downstream loss.

Number: 6 Author: HPQ-RElliott Subject: Highlight Date: 9/3/2008 9:42:24 AM -07'00'

nexusus
s/n
nexuses

Status
moverby Accepted 11/3/2008 4:56:16 PM

Number: 7 Author: Kevin_Marks Subject: Highlight Date: 8/11/2008 2:40:33 PM -07'00'

nexusus
s/b
nexuses

Status
moverby Accepted 11/3/2008 4:56:12 PM

Number: 8 Author: HPQ-RElliott Subject: Highlight Date: 9/3/2008 9:42:24 AM -07'00'

nexusus
s/n
nexuses

Status
moverby Accepted 11/3/2008 4:56:45 PM

Number: 9 Author: Kevin_Marks Subject: Highlight Date: 8/11/2008 2:40:41 PM -07'00'

nexusus
s/b
nexuses

Status
moverby Accepted 11/3/2008 4:56:30 PM

Number: 10 Author: Kevin_Marks Subject: Highlight Date: 8/11/2008 2:41:09 PM -07'00'

unit, the
s/b
unit, then the

Status
moverby Accepted 11/3/2008 4:56:26 PM

Number: 11 Author: HPQ-RElliott Subject: Note Date: 9/3/2008 9:42:24 AM -07'00'

Section 6.6 also applies to ATAPI devices; there's no way to reject a SCSI event (unlike the TMFs).

The SATL doesn't abort commands with CHECK POWER MODE in that case; it should use the ATA hardware reset or software reset only. In the first list, changing 1) to refer to 6.4.3 should cover that. Item 3) does not apply, however, as the ATAPI device establishes its own unit attention condition.

Status
moverby Rejected 11/4/2008 10:39:54 AM

Comments from page 50 continued on next page

6.5 CONTROL Byte

~~6.5.1 CONTROL byte overview~~

Table 9 describes SATL handling of the CDB CONTROL byte. See SAM-4 for CONTROL byte details.

Table 9 — CONTROL byte fields

Field	Description
Vendor specific	The SATL may use this field for vendor-specific purposes.
NACA	If set to one, the SATL shall terminate the command with CHECK CONDITION status with the sense key set to ILLEGAL REQUEST and the additional sense code set to INVALID FIELD IN CDB.
~~LINK~~	~~If set to one, the SATL shall terminate the command with CHECK CONDITION status with the sense key set to ILLEGAL REQUEST and the additional sense code set to INVALID FIELD IN CDB.~~

6.6 I_T nexus loss

The SATL may detect an I_T nexus loss event (see SAM-4). If the SATL detects an I_T nexus loss event the SATL handles the I_T nexus loss event differently depending on whether the SATL provides multiple I_T nexusus access to the emulated SCSI logical unit.

If the SATL does not provide multiple I_T nexusus access to the emulated SCSI logical unit, the SATL shall handle the I_T nexus loss as follows:

1) abort any outstanding ATA command(s) (see 6.4.2);
2) delete all commands in the task set from the SATL internal context; and
3) establish a unit attention condition for each affected I_T nexus with the additional sense code set to I_T NEXUS LOSS OCCURRED.

If the SATL provides multiple I_T nexusus access to the emulated SCSI logical unit, the SATL shall handle the I_T nexus loss as follows:

1) allow any outstanding ATA command(s) for each I_T nexus that is not lost to complete;
2) abort any remaining ATA command(s) (see 6.4.2 and 6.4.3);
3) delete all commands in the task set from the SATL internal context for commands associated with the I_T nexus that the I_T nexus loss event occured; and
4) establish a unit attention with the additional sense code set to I_T NEXUS LOSS OCCURRED for the SCSI initiator port associated with the I_T nexus that was lost.

Author: moverby Subject: Sticky Note Date: 11/4/2008 10:39:51 AM

Rejected as being dealt with in Annex A stating that there is no TMF

Number: 12 Author: HPQ-RElliott Subject: Highlight Date: 9/3/2008 9:42:24 AM -07'00'

(see 6.4.2)

6.4.2 only covers queued commands; need to also refer to 6.4.3 to cover non-queued commands. (I_T nexus loss is a SCSI event, so could occur even while a non-queued command is outstanding)

Status

moverby Accepted 11/3/2008 4:57:14 PM

Number: 13 Author: Kevin_Marks Subject: Highlight Date: 8/11/2008 2:43:05 PM -07'00'

each affected I_T nexus
s/b
the affected I_T nexus

although wording is technically ok, since there can only be one, why each affected.

Status

moverby Accepted 11/3/2008 4:57:36 PM

Number: 14 Author: Kevin_Marks Subject: Highlight Date: 8/11/2008 2:40:47 PM -07'00'

nexusus
s/b
nexuses

Status

moverby Accepted 11/3/2008 4:57:45 PM

Number: 15 Author: HPQ-RElliott Subject: Highlight Date: 9/3/2008 9:42:24 AM -07'00'

nexusus
s/n
nexuses

Status

moverby Accepted 11/3/2008 4:57:40 PM

Number: 16 Author: HPQ-RElliott Subject: Highlight Date: 9/3/2008 9:42:24 AM -07'00'

occured
s/b
occurred

Status

moverby Accepted 11/3/2008 4:57:50 PM

Number: 17 Author: HPQ-RElliott Subject: Note Date: 9/9/2008 11:20:34 AM -07'00'

Add more 6.x sections describing what the SATL does if it detects every SCSI event defined in SAM-4 on the front side, just like 6.6 describes handling of I_T nexus loss on the front side. (e.g. if the SATL is in a FC to SATA bridge, and there is a hard reset, etc. on the FC side).

Make them subsections of one "6.x SCSI events" section

a) power on: <not sure what to say>

b) hard reset: abort outstanding ATA commands, delete commands in the internal context, establish unit attention condition. Should it send an ATA hardware reset in all cases rather than a software reset?

c) logical unit reset: move the functional description from 6.4.8 into here.

c) power loss expected: abort outstanding ATA commands like with I_T nexus loss (or like hard reset?), delete commands in the internal context, establish unit attention condition.

Resolution: Add table listing all events and a cross-reference to clauses describing handling of the events. Mark all but IT_nexus loss and logical unit reset as unspecified.

Status

moverby Accepted 11/4/2008 10:40:27 AM

Author: moverby Subject: Sticky Note Date: 11/4/2008 10:40:22 AM

Dealt with in Brad Besmers proposal for extensions to TMF

7 Summary of SCSI / ATA command mappings

~~7.1 Translated and emulated commands~~

In the event of a discrepancy between the contents of this clause and the description of individual commands, description of individual commands shall apply.

Clause 7, clause 8, and clause 9 describe the SCSI to ATA command mapping for ATA devices. Translation for ATAPI devices is described in Annex A.

The SATL shall not send more than one ATA command to the ATA device representing the logical unit with the exception of ATA queued commands (see 3.1.20). The SATL shall queue received SCSI commands as necessary to enforce this.

Table 10 lists the SCSI / ATA command mappings defined in this standard. A SATL may implement commands defined in SPC-3 and SBC-3, but not listed in table 10. Translation of commands not listed in table 10 is vendor-specific.

Table 10 — Summary of SCSI / ATA Command Mapping (part 1 of 2)

SCSI command	ATA command(s)	Reference
ATA PASS-THROUGH (12)	Any	12.2.2
ATA PASS-THROUGH (16)		12.2.3
FORMAT UNIT	READ VERIFY SECTORS, READ VERIFY SECTORS EXT, WRITE SECTORS, WRITE SECTORS EXT	9.2
INQUIRY	IDENTIFY DEVICE	8.1
LOG SENSE	Log page dependent (see 10.2)	8.2
MODE SELECT (6)	Mode page dependent (see 10.1)	8.3
MODE SELECT (10)		8.4
MODE SENSE (6)		8.5
MODE SENSE (10)		8.6
READ (6)	See 9.1	9.3
READ (10)		9.5
READ (12)		9.6
READ (16)		9.7
READ BUFFER	READ BUFFER	8.7
READ CAPACITY (10)	IDENTIFY DEVICE	9.8
READ CAPACITY (16)		9.9
REASSIGN BLOCKS	READ VERIFY SECTOR(S), READ VERIFY SECTOR(S) EXT, WRITE DMA, WRITE DMA EXT, WRITE DMA FUA EXT, WRITE DMA QUEUED, WRITE DMA QUEUED EXT, WRITE DMA QUEUED FUA EXT, and WRITE FPDMA QUEUED	9.10
REPORT LUNS	n/a	SPC-3
REQUEST SENSE	SMART RETURN STATUS	8.8
SEND DIAGNOSTIC	SMART EXECUTE OFF-LINE IMMEDIATE	8.9
START STOP UNIT	FLUSH CACHE, FLUSH CACHE EXT, STANDBY, READ VERIFY SECTOR(S), or MEDIA EJECT	9.11
SYNCHRONIZE CACHE (10)	FLUSH CACHE or FLUSH CACHE EXT	9.12
SYNCHRONIZE CACHE (16)		9.13

Page: 51

Number: 1 Author: HPQ-RElliott Subject: Cross-Out Date: 9/3/2008 9:42:24 AM -07'00'

Delete this level

7.1 Translated and emulated commands

since there is no 7.2

Status
moverby Accepted 10/20/2008 2:11:32 PM -07'00'

Number: 2 Author: HPQ-RElliott Subject: Highlight Date: 9/3/2008 9:42:24 AM -07'00'

SCSI to ATA command mapping for ATA devices

Add in the concept of "mapping to a SCSI logical unit with a peripheral device type of 00h (i.e., direct-access block device)"

Status
moverby Accepted 10/20/2008 2:12:51 PM -07'00'
Author: moverby Subject: Sticky Note Date: 10/20/2008 2:12:47 PM -07'00'
...emulating a SCSI logical unit with a peripheral device type of 00h (i.e., direct-access block device)

Number: 3 Author: HPQ-RElliott Subject: Highlight Date: 9/3/2008 9:42:24 AM -07'00'

Translation

is not the right word for ATAPI

Status
moverby Accepted 10/20/2008 2:11:58 PM -07'00'
Author: moverby Subject: Sticky Note Date: 10/20/2008 2:11:55 PM -07'00'
Changed to Command transmission...

Number: 4 Author: Kevin_Marks Subject: Highlight Date: 8/11/2008 2:44:33 PM -07'00'

SPC-3
s/b
SPC-4

Status
moverby Accepted 11/3/2008 11:17:23 PM

Number: 5 Author: HPQ-RElliott Subject: Note Date: 9/3/2008 9:42:24 AM -07'00'

In the ATA command list,

FORMAT UNIT uses no "and" or "or"
REASSIGN BLOCKS uses "and"
START STOP UNIT uses "or"
SYNCHRONIZE CACHE uses "or"
WRITE BUFFER uses "or"

pick one convention

Status
moverby Accepted 10/20/2008 5:22:17 PM -07'00'
Author: moverby Subject: Sticky Note Date: 10/20/2008 5:22:14 PM -07'00'
Make them all or. Add a footnote on the more complex ones with an explanation on the complexity.

Number: 6 Author: Kevin_Marks Subject: Sticky Note Date: 8/11/2008 2:46:22 PM -07'00'

SECURITY PROTOCOL IN/OUT missing from table 10.

Status
moverby Accepted 10/20/2008 2:17:58 PM -07'00'
Author: moverby Subject: Sticky Note Date: 10/20/2008 2:17:55 PM -07'00'
Will add.

Number: 7 Author: LSI-Besmer Subject: Note Date: 9/3/2008 8:35:30 AM -07'00'

Missing:
- SECURITY PROTOCOL IN
- SECURITY PROTOCOL OUT

Status
moverby Accepted 10/20/2008 2:18:02 PM -07'00'

Number: 8 Author: HPQ-RElliott Subject: Note Date: 9/3/2008 9:42:24 AM -07'00'

Add CHECK POWER MODE to the ATA command(s) for REQUEST SENSE

Status
moverby Accepted 10/20/2008 2:18:18 PM -07'00'

Number: 9 Author: HPQ-RElliott Subject: Note Date: 9/3/2008 9:42:24 AM -07'00'

Add SECURITY PROTOCOL IN/OUT to table 10

Status
moverby Accepted 10/20/2008 2:18:22 PM -07'00'

Number: 10 Author: LSI-Besmer Subject: Note Date: 9/3/2008 10:08:20 AM -07'00'

Missing from Start/Stop Unit:

IDLE IMMEDIATE
STANDBY IMMEDIATE
READ VERIFY SECTOR(S) EXT

Comments from page 51 continued on next page

7 Summary of SCSI / ATA command mappings

~~7.1 Translated and emulated commands~~

In the event of a discrepancy between the contents of this clause and the description of individual commands, description of individual commands shall apply.

Clause 7, clause 8, and clause 9 describe the SCSI to ATA command mapping for ATA devices. Translation for ATAPI devices is described in Annex A.

The SATL shall not send more than one ATA command to the ATA device representing the logical unit with the exception of ATA queued commands (see 3.1.20). The SATL shall queue received SCSI commands as necessary to enforce this.

Table 10 lists the SCSI / ATA command mappings defined in this standard. A SATL may implement commands defined in SPC-3 and SBC-3, but not listed in table 10. Translation of commands not listed in table 10 is vendor-specific.

Table 10 — Summary of SCSI / ATA Command Mapping (part 1 of 2)

SCSI command	ATA command(s)	Reference
ATA PASS-THROUGH (12)	Any	12.2.2
ATA PASS-THROUGH (16)		12.2.3
FORMAT UNIT	READ VERIFY SECTORS, READ VERIFY SECTORS EXT, WRITE SECTORS, WRITE SECTORS EXT	9.2
INQUIRY	IDENTIFY DEVICE	8.1
LOG SENSE	Log page dependent (see 10.2)	8.2
MODE SELECT (6)	Mode page dependent (see 10.1)	8.3
MODE SELECT (10)		8.4
MODE SENSE (6)		8.5
MODE SENSE (10)		8.6
READ (6)	See 9.1	9.3
READ (10)		9.5
READ (12)		9.6
READ (16)		9.7
READ BUFFER	READ BUFFER	8.7
READ CAPACITY (10)	IDENTIFY DEVICE	9.8
READ CAPACITY (16)		9.9
REASSIGN BLOCKS	READ VERIFY SECTOR(S), READ VERIFY SECTOR(S) EXT, WRITE DMA, WRITE DMA EXT, WRITE DMA FUA EXT, WRITE DMA QUEUED, WRITE DMA QUEUED EXT, WRITE DMA QUEUED FUA EXT, and WRITE FPDMA QUEUED	9.10
REPORT LUNS	n/a	SPC-3
REQUEST SENSE	SMART RETURN STATUS	8.8
SEND DIAGNOSTIC	SMART EXECUTE OFF-LINE IMMEDIATE	8.9
START STOP UNIT	FLUSH CACHE, FLUSH CACHE EXT, STANDBY, READ VERIFY SECTOR(S), or MEDIA EJECT	9.11
SYNCHRONIZE CACHE (10)	FLUSH CACHE or FLUSH CACHE EXT	9.12
SYNCHRONIZE CACHE (16)		9.13

Status
moverby Accepted 10/20/2008 2:18:32 PM -07'00'

Number: 11 Author: HPQ-RElliott Subject: Note Date: 9/3/2008 9:42:24 AM -07'00'

Add "ATA verify commands" and "ATA flush commands" to the list of ATA command(s) for START STOP UNIT

Status
moverby Accepted 10/20/2008 2:18:37 PM -07'00'

Number: 12 Author: HPQ-RElliott Subject: Note Date: 9/3/2008 9:42:24 AM -07'00'

Add IDLE IMMEDIATE and STANDBY IMMEDIATE to list of ATA command(s) for START STOP UNIT

Status
moverby Accepted 10/20/2008 2:19:39 PM -07'00'

Table 10 — Summary of SCSI / ATA Command Mapping (part 2 of 2)

SCSI command	ATA command(s)	Reference
TEST UNIT READY	CHECK POWER MODE	8.12
VERIFY (10)	See 9.1	9.14
VERIFY (12)		9.15
VERIFY (16)		9.16
WRITE (6)	See 9.1	9.18
WRITE (10)		9.19
WRITE (12)		9.20
WRITE (16)		9.21
WRITE AND VERIFY (10)	See 9.1	9.23
WRITE AND VERIFY (12)		9.24
WRITE AND VERIFY (16)		9.25
WRITE BUFFER	WRITE BUFFER or DOWNLOAD MICROCODE	8.13
WRITE LONG (10)	WRITE UNCORRECTABLE EXT	9.26
WRITE LONG (16)		9.27
WRITE SAME (10)	See 9.1	9.28
WRITE SAME (16)		9.29

Number: 1 Author: HPQ-RElliott Subject: Note Date: 9/3/2008 9:42:24 AM -07'00'

Add GET MEDIA STATUS to the list of ATA command(s) for TEST UNIT READY

Status

moverby Accepted 10/20/2008 2:19:48 PM -07'00'

8 SCSI Primary Commands (SPC) mapping

8.1 INQUIRY command

8.1.1 INQUIRY command overview

The INQUIRY command requests general information about a logical unit and target device. The INQUIRY command and selected vital product data pages shall be emulated using information from the ATA IDENTIFY DEVICE command and other information (see 8.1.2). Table 11 describes the emulation of fields in the INQUIRY CDB.

Table 11 — INQUIRY CDB field translations

Field	Description or reference
OPERATION CODE	Set to 12h. The SATL shall send an ATA IDENTIFY DEVICE command to the ATA device.
EVPD	The SATL shall implement this field as defined in SPC-3 (see 10.3).
PAGE CODE[a]	The SATL: a) shall support the Supported VPD Pages VPD page (00h) (see 10.3.2); b) may support the Unit Serial Number VPD page (80h) (see 10.3.3); c) shall support the Device Identification VPD page (83h) (see 10.3.4); d) should support the Mode Page Policy VPD page (87h) (see 10.3.5); e) shall support the ATA Information VPD page (89h) (see 12.4.2); and f) may support the Block Device Characteristics VPD page (B1h) (see 10.3.6).
ALLOCATION LENGTH	The SATL shall implement this field as defined in SPC-3.
CONTROL	6.5

[a] VPD page translations are defined in 10.3

Page: 53

Number: 1 Author: HPQ-RElliott Subject: Highlight Date: 9/3/2008 9:42:24 AM -07'00'

mapping
s/b
command mapping

since SPC mode pages, VPD pages, etc. are not described in section 8

Status
moverby Accepted 10/20/2008 2:20:04 PM -07'00'

Number: 2 Author: ENDL Texas Subject: Highlight Date: 9/2/2008 9:22:18 AM -07'00'

vital product data s/b VPD

Status
moverby Accepted 10/20/2008 2:20:19 PM -07'00'

Number: 3 Author: Kevin_Marks Subject: Highlight Date: 8/11/2008 4:00:36 PM -07'00'

SPC-3
s/b
SPC-4

Status
moverby Accepted 11/3/2008 11:17:27 PM

Number: 4 Author: Kevin_Marks Subject: Highlight Date: 8/11/2008 4:00:49 PM -07'00'

SPC-3
s/b
SPC-4

Status
moverby Accepted 11/3/2008 11:17:31 PM

Number: 5 Author: ENDL Texas Subject: Note Date: 9/2/2008 9:22:25 AM -07'00'

The table footnote sentence is missing a period.

Status
moverby Accepted 10/20/2008 2:20:25 PM -07'00'

8.1.2 Standard INQUIRY data

Table 12 describes the standard INQUIRY data fields supported by the SATL.

Table 12 — Standard INQUIRY data fields (part 1 of 3)

Field	Description or reference
PERIPHERAL QUALIFIER	The SATL shall set this field to 000b to indicate that the peripheral device is currently connected to this logical unit.[a]
PERIPHERAL DEVICE TYPE	The SATL shall set this field to 00h to indicate that the peripheral device is a direct access block device.[a]
RMB	The SATL shall set this bit to the value of bit 7 of the general configuration word of the ATA IDENTIFY DEVICE data retrieved from the ATA device.
VERSION	The VERSION field indicates the version of SPC to which the SATL complies[1] (see SPC-3) (e.g., 05h for SPC-3).
NORMACA	The SATL shall set this bit to zero to indicate the SATL does not support the NACA bit in the CONTROL byte (see 6.5).
HISUP	Unspecified (see 3.4.2)
RESPONSE DATA FORMAT	The SATL shall set this field to 2h.
ADDITIONAL LENGTH	The SATL shall set this field to the length of the INQUIRY data that follows.
SCCS	Unspecified (see 3.4.2)
ACC	Unspecified (see 3.4.2)
TPGS	Unspecified (see 3.4.2)
3PC	Unspecified (see 3.4.2)
PROTECT	Unspecified (see 3.4.2)
[3]~~BQUE~~	~~Unspecified (see 3.4.2)~~
ENCSERV	Unspecified (see 3.4.2)
MULTIP	Unspecified (see 3.4.2)
~~MCHNGR~~	[4]~~The SATL shall set this bit to zero to indicate the peripheral device is not attached to a medium transport element.~~
ADDR16	Unspecified (see 3.4.2)
WBUS16	Unspecified (see 3.4.2)

[a] If the INQUIRY command is sent to an incorrect logical unit the SATL shall set the PERIPHERAL QUALIFIER field to 011b and shall set the PERIPHERAL DEVICE TYPE field to 1Fh.
[b] See 3.5.4.
[c] The full ATA IDENTIFY DEVICE data Model number field contents and the Firmware Revision field contents are returned in the ATA Information VPD page (see 12.4.2).
[d] The encoding used by the [5]SPC-3 standard for INQUIRY version descriptors and the encoding used by the ATA8-ACS standard for [6]IDENTIFY DEVICE major and minor version numbers differ. The two standards may not define values for the same revisions.

Page: 54

Number: 1 Author: Kevin_Marks Subject: Highlight Date: 8/11/2008 6:23:42 PM -07'00'

(see SPC-3) (e.g., 05h for SPC-3).
s/b
(see SPC-4) (e.g., 06h for SPC-4).

Status
moverby Accepted 11/3/2008 11:17:37 PM

Number: 2 Author: HPQ-RElliott Subject: Cross-Out Date: 9/3/2008 9:42:24 AM -07'00'

Delete

BQUE Unspecified (see 3.4.2)

it is obsolete in SPC-4

Status
moverby Accepted 10/20/2008 5:27:57 PM -07'00'

Author: moverby Subject: Sticky Note Date: 10/20/2008 5:27:49 PM -07'00'

Replace with a see (to the section on basic vs. full task management)

Number: 3 Author: Kevin_Marks Subject: Cross-Out Date: 8/11/2008 6:28:13 PM -07'00'

Status
moverby Accepted 11/3/2008 4:58:31 PM

Number: 4 Author: HPQ-RElliott Subject: Cross-Out Date: 9/3/2008 9:42:24 AM -07'00'

Delete

MCHNGR
The SATL shall set this bit to zero to indicate the peripheral device is not attached to a medium transport element.

it is obsolete in SPC-4

Status
moverby Accepted 10/20/2008 5:28:07 PM -07'00'

Number: 5 Author: Kevin_Marks Subject: Highlight Date: 8/11/2008 6:27:06 PM -07'00'

SPC-3
s/b
SPC-4

Status
moverby Accepted 11/3/2008 11:17:41 PM

Number: 6 Author: Kevin_Marks Subject: Highlight Date: 8/11/2008 6:27:49 PM -07'00'

IDENTIFY DEVICE
s/b
ATA IDENTIFY DEVICE

Status
moverby Accepted 10/20/2008 2:27:31 PM -07'00'

Table 12 — Standard INQUIRY data fields (part 2 of 3)

Field	Description or reference
SYNC	Unspecified (see 3.4.2)
CMDQUE	Unspecified (see 3.4.2)
T10 VENDOR IDENTIFICATION	The SATL shall set the T10 VENDOR IDENTIFICATION field to 'ATA¬¬¬¬¬'[b].
PRODUCT IDENTIFICATION[c]	The SATL shall set the PRODUCT IDENTIFICATION field to a representation of the first 16 bytes of the ATA IDENTIFY DEVICE data Model number field, where each pair of bytes are swapped to create a valid ASCII string format: 1) byte 0 contains ATA IDENTIFY DEVICE word 27 bits 15:8 (i.e., byte 1); 2) byte 1 contains ATA IDENTIFY DEVICE word 27 bits 7:0 (i.e., byte 0); 3) byte 2 contains ATA IDENTIFY DEVICE word 28 bits 15:8 (i.e., byte 3); 4) byte 3 contains ATA IDENTIFY DEVICE word 28 bits 7:0 (i.e., byte 2); ... 15) byte 14 contains ATA IDENTIFY DEVICE word 34 bits 15:8 (i.e., byte 15); and 16) byte 15 contains ATA IDENTIFY DEVICE word 34 bits 7:0 (i.e., byte 14).
PRODUCT REVISION LEVEL[c]	The SATL shall set the PRODUCT REVISION LEVEL field to a four byte ASCII character representation of the ATA IDENTIFY DEVICE data Firmware revision field. Each pair of bytes are swapped to create a valid ASCII string format. Since the ATA IDENTIFY DEVICE data Firmware revision field contains eight ASCII characters and the standard INQUIRY data PRODUCT REVISION LEVEL field is four ASCII characters, the SATL shall select four of the eight ASCII characters from the ATA IDENTIFY DEVICE data Firmware revision field to return in the PRODUCT REVISION LEVEL field as follows: a) If the ATA IDENTIFY DEVICE data words 26:25 are set to four ASCII spaces (i.e., 2020_2020h), then the four ASCII characters selected shall contain: 1) byte 0 contains ATA IDENTIFY DEVICE data word 23 bits 15:8 (i.e., byte 1); 2) byte 1 contains ATA IDENTIFY DEVICE data word 23 bits 7:0 (i.e., byte 0); 3) byte 2 contains ATA IDENTIFY DEVICE data word 24 bits 15:8 (i.e., byte 3); and 4) byte 3 contains ATA IDENTIFY DEVICE data word 24 bits 7:0 (i.e., byte 2); or b) If the ATA IDENTIFY DEVICE data words 26:25 are not set to four ASCII spaces (i.e., 2020_2020h), then the four ASCII characters selected shall contain: 1) byte 0 contains ATA IDENTIFY DEVICE data word 25 bits 15:8 (i.e., byte 5); 2) byte 1 contains ATA IDENTIFY DEVICE data word 25 bits 7:0 (i.e., byte 4); 3) byte 2 contains ATA IDENTIFY DEVICE data word 26 bits 15:8 (i.e., byte 7); and 4) byte 3 contains ATA IDENTIFY DEVICE data word 26 bits 7:0 (i.e., byte 6).
CLOCKING	Unspecified (see 3.4.2)
QAS	Unspecified (see 3.4.2)
IUS	Unspecified (see 3.4.2)

[a] If the INQUIRY command is sent to an incorrect logical unit the SATL shall set the PERIPHERAL QUALIFIER field to 011b and shall set the PERIPHERAL DEVICE TYPE field to 1Fh.
[b] See 3.5.4.
[c] The full ATA IDENTIFY DEVICE data Model number field contents and the Firmware Revision field contents are returned in the ATA Information VPD page (see 12.4.2).
[d] The encoding used by the SPC-3 standard for INQUIRY version descriptors and the encoding used by the ATA8-ACS standard for IDENTIFY DEVICE major and minor version numbers differ. The two standards may not define values for the same revisions.

Page: 55

Number: 1 Author: ENDL Texas Subject: Highlight Date: 9/2/2008 9:22:31 AM -07'00'

The 'or' should be aligned with the 'If' in b), not with ATA.

Status
moverby Accepted 11/3/2008 4:58:45 PM

Number: 2 Author: Kevin_Marks Subject: Highlight Date: 8/11/2008 6:29:28 PM -07'00'

SPC-3
s/b
SPC-4

Status
moverby Accepted 11/3/2008 11:17:50 PM

Number: 3 Author: Kevin_Marks Subject: Highlight Date: 8/11/2008 6:29:40 PM -07'00'

IDENTIFY DEVICE
s/b
ATA IDENTIFY DEVICE

Status
moverby Accepted 10/20/2008 2:32:56 PM -07'00'

Table 12 — Standard INQUIRY data fields (part 3 of 3)

Field	Description or reference
VERSION DESCRIPTOR 1 to VERSION DESCRIPTOR 8	The SATL shall include version descriptors (see SPC-3) for: a) the SCSI Architecture Model standard (e.g., SAM-4); b) this standard; c) the SCSI Primary Commands standard (e.g., SPC-3); d) the SCSI Block Commands standard (e.g., SBC-2); e) if the SATL receives SCSI commands through a SCSI target port (see figure 5 in 5.1), the version of the transport protocol to which the SCSI target port was designed; f) if the SATL sends ATA commands through a SAS STP initiator port (see figure 7 in 5.1), the version of SAS (e.g., SAS-1.1) to which the SAS STP initiator port was designed; and g) the version(s) of ATA standards (e.g., ATA8-ACS and ATA8-AAM) to which the ATA device claims compliance in the ATA IDENTIFY DEVICE data word 80 (i.e., Major version number) and ATA IDENTIFY DEVICE data word 81 (i.e., Minor version number), and words 222 and 223.[d]
Vendor specific parameters	Unspecified (see 3.4.2)

[a] If the INQUIRY command is sent to an incorrect logical unit the SATL shall set the PERIPHERAL QUALIFIER field to 011b and shall set the PERIPHERAL DEVICE TYPE field to 1Fh.
[b] See 3.5.4.
[c] The full ATA IDENTIFY DEVICE data Model number field contents and the Firmware Revision field contents are returned in the ATA Information VPD page (see 12.4.2).
[d] The encoding used by the SPC-3 standard for INQUIRY version descriptors and the encoding used by the ATA8-ACS standard for IDENTIFY DEVICE major and minor version numbers differ. The two standards may not define values for the same revisions.

8.2 LOG SENSE command

8.2.1 LOG SENSE command overview

The LOG SENSE command provides a means for the application client to retrieve statistical or other operational information maintained by the SCSI target device about the SCSI target device or its logical units. Table 13 shows the translation for fields specified in the LOG SENSE CDB.

Table 13 — LOG SENSE CDB field translations

Field	Description or reference
OPERATION CODE	Set to 4Dh. The SATL shall implement support for this field by returning the log page data for the particular page requested.
PPC	Unspecified (see 3.4.2)
SP	Unspecified (see 3.4.2)
PC	8.2.2
PAGE CODE	8.2.3
PARAMETER POINTER	Unspecified (see 3.4.2)
ALLOCATION LENGTH	The SATL shall implement support for this field as defined in SPC-3.
CONTROL	6.5

Page: 56

Number: 1 Author: Kevin_Marks Subject: Highlight Date: 8/11/2008 6:30:45 PM -07'00'

(see SPC-3)
s/b
(see SPC-4)

Status
moverby Accepted 11/3/2008 11:17:54 PM

Number: 2 Author: Kevin_Marks Subject: Highlight Date: 8/11/2008 6:31:01 PM -07'00'

(e.g., SPC-3);
s/b
(e.g., SPC-3);

Status
moverby Accepted 11/3/2008 11:17:58 PM

Number: 3 Author: Kevin_Marks Subject: Highlight Date: 8/11/2008 6:31:23 PM -07'00'

(e.g., SBC-2);
s/b
(e.g., SBC-3);

Status
moverby Accepted 11/3/2008 11:18:01 PM

Number: 4 Author: Kevin_Marks Subject: Highlight Date: 8/11/2008 6:31:43 PM -07'00'

(e.g., SAS-1.1)
s/b
(e.g., SAS-2)

Status
moverby Accepted 11/3/2008 11:18:05 PM

Number: 5 Author: Kevin_Marks Subject: Highlight Date: 8/11/2008 6:30:15 PM -07'00'

SPC-3
s/b
SPC-4

Status
moverby Accepted 11/3/2008 11:18:09 PM

Number: 6 Author: Kevin_Marks Subject: Highlight Date: 8/11/2008 6:30:02 PM -07'00'

IDENTIFY DEVICE
s/b
ATA IDENTIFY DEVICE

Status
moverby Accepted 11/3/2008 4:59:02 PM

Number: 7 Author: Kevin_Marks Subject: Sticky Note Date: 8/14/2008 8:38:10 AM -07'00'

Will need to add sub-page support row for SPC-4

Status
moverby Accepted 11/3/2008 4:59:15 PM

Number: 8 Author: Kevin_Marks Subject: Highlight Date: 8/11/2008 6:32:41 PM -07'00'

SPC-3.
s/b
SPC-4.

Status
moverby Accepted 11/3/2008 11:18:12 PM

8.2.2 PC (page control) field

The SATL shall implement this field as defined in SPC-3. The SATL interpretation and support of the page control values is shown in table 14.

Table 14 — PC field

Code	Description
00b	Threshold values: unspecified (see 3.4.2)
01b	Cumulative values: supported
10b	Default threshold values: unspecified (see 3.4.2)
11b	Default cumulative values: unspecified (see 3.4.2)

8.2.3 PAGE CODE field

The SATL shall support this field as defined in SPC-3. The SATL emulation for support of the PAGE CODE field is provided in table 15.

Table 15 — PAGE CODE field

Code	Description
00h	Supported Log Pages log page: The SATL shall implement this page by returning a list of supported log pages (see 10.2.3).
10h	Self-Test Results log page: The SATL shall determine if the ATA SMART self-test is supported from the ATA IDENTIFY DEVICE data word 84 bit 1. If the ATA SMART self-test is not supported (i.e., word 84 bit 1 is set to zero) the SATL shall return a CHECK CONDITION status with the sense key set to ILLEGAL REQUEST and additional sense code set to INVALID FIELD IN CDB. If the ATA SMART self-test is supported (i.e., word 84 bit 1 is set to one) the SATL shall return the translated Self-Test Results log page to the application client (see 10.2.4).
2Fh	Informational Exceptions log page: The SATL shall determine if the ATA SMART feature set is supported from the ATA IDENTIFY DEVICE data word 82 bit 0. If the ATA SMART feature set is not supported (i.e., word 82 bit 0 is set to zero) the SATL shall return a CHECK CONDITION status with the sense key set to ILLEGAL REQUEST and additional sense code set to INVALID FIELD IN CDB. If the ATA SMART feature set is supported (i.e., word 82 bit 0 is set to one) the SATL shall determine if the ATA SMART feature set is enabled or disabled from the ATA IDENTIFY DEVICE data word 85 bit 0. If the ATA SMART feature set is disabled (i.e., word 85 bit 0 is set to zero) the SATL shall return a CHECK CONDITION status with the sense key set to ABORTED COMMAND and additional sense code set to ATA DEVICE FEATURE NOT ENABLED. If the ATA SMART feature set is enabled (i.e., word 85 bit 0 is set to one) the SATL shall return the translated Informational Exceptions log page to the application client (see 10.2.5.1).
All others	Unspecified (see 3.4.2)

Page: 57

Number: 1 Author: Kevin_Marks Subject: Highlight Date: 8/11/2008 6:35:04 PM -07'00'

SPC-3.
s/b
SPC-4.

Status
moverby Accepted 11/3/2008 5:01:50 PM

Number: 2 Author: ENDL Texas Subject: Note Date: 9/2/2008 9:22:49 AM -07'00'

The description of the support requirements in this subclause seems inconsistent. The first sentence seems to say full support for the field is required. Table 14 suggests otherwise.

Status
moverby Accepted 11/3/2008 5:00:04 PM

Author: moverby Subject: Sticky Note Date: 11/3/2008 5:00:00 PM

Agreed. Delete sentence.

Number: 3 Author: ENDL Texas Subject: Rectangle Date: 9/2/2008 9:22:56 AM -07'00'

This table appears to contain three columns (Code, SPC-4 Description, and Description), not two (Code and Description). The break between the SPC-4 description and the SAT-2 description occurs at the colons.

Status
moverby Accepted 11/3/2008 5:00:54 PM

Author: moverby Subject: Sticky Note Date: 11/3/2008 5:00:51 PM

Keeping at two columns, but eliminating the information before the colon.

Number: 4 Author: Kevin_Marks Subject: Highlight Date: 8/11/2008 6:36:45 PM -07'00'

8.2.3 PAGE CODE field
s/b
8.2.3 PAGE CODE field and SUBPAGE CODE field

Status
moverby Accepted 11/3/2008 5:01:32 PM

Number: 5 Author: Kevin_Marks Subject: Highlight Date: 8/11/2008 6:35:57 PM -07'00'

SPC-3.
s/b
SPC-4.

Status
moverby Accepted 11/3/2008 5:01:45 PM

Number: 6 Author: Kevin_Marks Subject: Highlight Date: 8/11/2008 6:37:57 PM -07'00'

PAGE CODE field
s/b
PAGE CODE field and SUBPAGE CODE field

Status
moverby Accepted 11/3/2008 5:01:25 PM

Number: 7 Author: Kevin_Marks Subject: Highlight Date: 8/11/2008 6:38:36 PM -07'00'

Table 15 — PAGE CODE field

Add in column for subpage set to 00h for each.

Status
moverby Accepted 11/3/2008 5:01:19 PM

8.3 MODE SELECT (6) command

8.3.1 MODE SELECT (6) command overview

The MODE SELECT(6) command (see SPC-3) provides a means for an application client to specify medium, logical unit, or peripheral device parameters to a device server in the SATL. Device servers that implement the MODE SELECT (6) command shall also implement the MODE SENSE (6) command. Application clients should send a MODE SENSE (6) command prior to each MODE SELECT (6) command to determine supported mode pages, page lengths, and other parameters.

The Mode Page Policy VPD page should be implemented (see 10.3.5). After a logical unit reset, the SATL shall set all mode page values to saved or default values. See clause 10 for supported mode pages.

8.3.2 MODE SELECT (6) CDB fields

The SATL shall support MODE SELECT (6) CDB fields as shown in table 16.

Table 16 — MODE SELECT (6) CDB field translations

Field	Description or reference
OPERATION CODE	Set to 15h. The SATL shall modify logical unit, or peripheral device parameters for supported mode pages and parameters as specified in mode pages received from the application client. Some operational parameters in individual pages are provided via ATA. See clause 10 for specific requirements.
SP	Unspecified (see 3.4.2)
PF	If this bit is set to zero (i.e., specifes that mode pages are vendor specific), then the SATL shall terminate the command with CHECK CONDITION status with the sense key set to ILLEGAL REQUEST and the additional sense code set to INVALID FIELD IN CDB. The SATL shall support this bit being set to one (i.e., specifies that all mode page formats correspond to SPC-3 and SBC-2 mode page formats).
PARAMETER LIST LENGTH	This field should be set to the length of the mode parameter list to be transferred from the application client.
CONTROL	6.5

8.4 MODE SELECT (10) command

The MODE SELECT (10) command (see SPC-3) provides a means for an application client to set parameters in the device server in a SATL. It is a complementary command to the MODE SENSE(10) command.

The SATL shall implement the MODE SELECT (10) command using the translation described in 8.3. Device servers that implement the MODE SELECT (10) command shall also implement the MODE SENSE (10) command. See 10.1 for supported mode pages.

8.5 MODE SENSE (6) command

8.5.1 MODE SENSE (6) command overview

The MODE SENSE (6) command (see SPC-3) provides a means for a device server in a SATL to report parameters to an application client. It is a complementary command to the MODE SELECT(6) command. Device servers that implement the MODE SENSE (6) command shall also implement the MODE SELECT(6) command. See 10.1 for supported mode pages.

Page: 58

Number: 1 Author: Kevin_Marks Subject: Highlight Date: 8/11/2008 7:23:03 PM -07'00'

(see SPC-3)
s/b
(see SPC-4)

Status
moverby Accepted 11/3/2008 11:18:16 PM

Number: 2 Author: ENDL Texas Subject: Highlight Date: 9/2/2008 9:23:06 AM -07'00'

See clause 10 s/b See 10.1

Status
moverby Accepted 11/3/2008 11:18:24 PM

Number: 3 Author: ENDL Texas Subject: Highlight Date: 9/2/2008 9:23:27 AM -07'00'

... via ATA. See clause 10 for specific requirements. s/b ... via ATA (see 10.1). [as is found in table 17]

Status
moverby Accepted 11/3/2008 11:18:30 PM

Number: 4 Author: Kevin_Marks Subject: Highlight Date: 8/11/2008 7:23:48 PM -07'00'

correspond to SPC-3 and SBC-2 mode page formats).
s/b
correspond to SPC-4 and SBC-3 mode page formats).

Status
moverby Accepted 11/3/2008 11:18:33 PM

Number: 5 Author: ENDL Texas Subject: Highlight Date: 9/2/2008 9:23:33 AM -07'00'

What is it about the MODE SELECT command that necessitates using a length field definition which differs from the 'The SATL shall implement support for this field as defined in SPC-4.' definition used for other length fields?

Status
moverby Accepted 11/4/2008 10:10:51 AM

Author: moverby Subject: Sticky Note Date: 11/3/2008 11:18:54 PM

Should be as defined in SPC-4.

Author: moverby Subject: Sticky Note Date: 11/4/2008 10:10:14 AM

Change to unspecified (see xxxx)

Number: 6 Author: Kevin_Marks Subject: Highlight Date: 8/11/2008 7:24:22 PM -07'00'

(see SPC-3)
s/b
(see SPC-4)

Status
moverby Accepted 11/3/2008 11:18:57 PM

Number: 7 Author: HPQ-RElliott Subject: Note Date: 9/3/2008 9:42:24 AM -07'00'

Add a CDB table in 8.4 with "As defined in MODE SELECT (6) (see 8.3)" descriptions

Note that the operation code must change to 55h for MODE SELECT (10).

Status
moverby Accepted 11/3/2008 11:19:06 PM

Number: 8 Author: Kevin_Marks Subject: Highlight Date: 8/11/2008 7:25:00 PM -07'00'

(see SPC-3)
s/b
(see SPC-4)

Status
moverby Accepted 11/3/2008 11:19:09 PM

8.5.2 MODE SENSE (6) CDB fields

The SATL shall support MODE SENSE (6) CDB fields as shown in table 17.

Table 17 — MODE SENSE (6) CDB field translations

Field	Description or reference
OPERATION CODE	Set to 1Ah. The SATL shall return the requested mode pages to the application client. Some operational parameters in individual pages are gathered by issuing ATA commands (see 10.1).
DBD	A DBD bit set to zero specifies that zero or more block descriptors may be returned in MODE SENSE data. The SATL shall support only the mode parameter block descriptor format for direct-access block devices.
PC	Current values (i.e., the PC field is set to 00b) shall be supported. Reporting changeable, saveable, and default values is unspecified (see 3.4.2).
PAGE CODE	This field specifies the particular mode page requested (see 10.1). If the SATL does not support the specified mode page, the SATL shall terminate the command with CHECK CONDITION status, with the sense key set to ILLEGAL REQUEST and the additional sense code set to INVALID FIELD IN CDB.
SUB PAGE CODE	This field specifies the sub page code within the page code specified by PAGE CODE field that is requested by the application client (see 10.1).
ALLOCATION LENGTH	The SATL shall implement this field as defined in SPC-3 (see 3.1.3).
CONTROL	6.5

8.6 MODE SENSE (10) command

The MODE SENSE (10) command (see SPC-3) provides a means for a device server in a SATL to report parameters to an application client. It is a complementary command to the MODE SELECT(10) command.

The SATL shall implement the MODE SENSE (10) command using the translation described in 8.5. Device servers that implement the MODE SENSE (10) command shall also implement the MODE SELECT(10) command. See 10.1 for supported mode pages.

Page: 59

Number: 1 Author: Kevin_Marks Subject: Highlight Date: 8/11/2008 7:25:38 PM -07'00'

SPC-3
s/b
SPC-4

Status
moverby Accepted 11/3/2008 5:02:20 PM

Number: 2 Author: ENDL Texas Subject: Highlight Date: 9/2/2008 9:23:41 AM -07'00'

Other instances of this description text do not include a cross reference. Remove or add cross reference(s) to make this text consistent throughout the standard.

Status
moverby Accepted 11/3/2008 5:02:10 PM

Author: moverby Subject: Sticky Note Date: 11/3/2008 5:02:07 PM

Remove cross-reference.

Number: 3 Author: Kevin_Marks Subject: Highlight Date: 8/11/2008 7:25:59 PM -07'00'

(see SPC-3)
s/b
(see SPC-4)

Status
moverby Accepted 11/3/2008 5:02:25 PM

Number: 4 Author: HPQ-RElliott Subject: Note Date: 9/3/2008 9:42:24 AM -07'00'

Add a CDB table in 8.6 with "As defined in MODE SENSE (6) (see 8.5)" descriptions.

Note that the OPERATION CODE must change to 5Ah for MODE SENSE (10).

Status
moverby Accepted 11/3/2008 11:19:29 PM

8.7 READ BUFFER command

8.7.1 READ BUFFER command overview

The READ BUFFER command (see SPC-3) is used in conjunction with the WRITE BUFFER command as a diagnostic function for testing memory in the SCSI device and the integrity of a service delivery subsystem. This command shall not alter the medium. Table 18 shows the translation for fields specified in the CDB for the READ BUFFER command.

Table 18 — READ BUFFER CDB field translations

Field	Description or reference
OPERATION CODE	Set to 3Ch. The SATL shall send the ATA READ BUFFER command to the ATA device.
MODE	8.7.2
BUFFER ID	If the the BUFFER ID field is set to 00h then the SATL shall return information describing or data read from the sector buffer in the ATA device, depending on the value in the MODE field (see 8.7.2). If the the BUFFER ID field is set to a value other than 00h then the translation is unspecified (see 3.4.2), and the SATL shall process the READ BUFFER command as defined in SPC-3.
BUFFER OFFSET	The meaning of this field depends on the contents of the MODE field (see 8.7.2).
ALLOCATION LENGTH	The meaning of this field depends on the contents of the MODE field (see 8.7.2).
CONTROL	6.5

The logical sector buffer in a ATA device shall be used to emulate the READ BUFFER command, so the size of the buffer is limited to 512 bytes for data buffer and echo buffers.

8.7.2 MODE field

8.7.2.1 MODE field overview

Table 19 describes values of the MODE field that the SATL shall support.

Table 19 — MODE field

Code	Description or reference
02h (i.e., Data)	If BUFFER ID field is set to 00h, then the translation shall be to the ATA READ BUFFER command (see 8.7.2.2). Otherwise, the translation is unspecified (see 3.4.2).
03h (i.e., Descriptor)	8.7.2.3
All others	Unspecified (see 3.4.2)

8.7.2.2 Data mode

If the BUFFER ID field is set to 00h, the BUFFER OFFSET field is set to 00h, and the ALLOCATION LENGTH field is set to 512, then the SATL shall return 512 bytes of data.

If the BUFFER ID field is set to 00h, the BUFFER OFFSET field is set to 00h,and the ALLOCATION LENGTH field is set to a value other than 512, then the SATL shall either:

a) return the the lesser of 512 bytes of data or the number of bytes specified in the ALLOCATION LENGTH field from the buffer in the ATA device by sending an ATA READ BUFFER command to the ATA device; or
b) terminate the command with CHECK CONDITION status with the sense key set to ILLEGAL REQUEST with the additional sense code set to INVALID FIELD IN CDB.

Page: 60

Number: 1 Author: Kevin_Marks Subject: Highlight Date: 8/11/2008 7:26:29 PM -07'00'

(see SPC-3)
s/b
(see SPC-4)

Status
moverby Accepted 11/3/2008 5:03:16 PM

Number: 2 Author: bmartin Subject: Highlight Date: 9/4/2008 12:22:48 AM -07'00'

The SATL shall send the ATA READ BUFFER command to the ATA device.

To follow the style of table 28, this should be

The SATL shall:
a) send an ATA READ BUFFER command to the ATA device; or
c) emulate the specified function (i.e., if supported);
depending on the values in the BUFFER ID field and MODE field (see 8.7.2.1).

Status
moverby Accepted 11/3/2008 5:04:08 PM

Number: 3 Author: ENDL Texas Subject: Highlight Date: 9/2/2008 9:23:52 AM -07'00'

Why is the table 18 treatment of unspecified values different than the table 19 treatment of what appears to be the same case (i.e., why is the text about processing the command as defined in SPC-4 needed)?

Status
moverby Accepted 11/3/2008 5:05:20 PM

Author: moverby Subject: Sticky Note Date: 11/3/2008 5:05:16 PM

The extra text is not needed and will be removed.

Number: 4 Author: Kevin_Marks Subject: Highlight Date: 8/11/2008 7:27:20 PM -07'00'

SPC-3.
s/b
SPC-4.

Status
moverby Accepted 11/3/2008 5:05:36 PM

Number: 5 Author: ENDL Texas Subject: Highlight Date: 9/2/2008 9:23:57 AM -07'00'

The meaning of this field s/b The translation of this field

Status
moverby Accepted 11/3/2008 5:05:32 PM

Number: 6 Author: ENDL Texas Subject: Highlight Date: 9/2/2008 8:43:30 AM -07'00'

Status
moverby Accepted 11/3/2008 5:05:57 PM

Author: moverby Subject: Sticky Note Date: 11/3/2008 5:05:54 PM

Replace with "The translation of this field..."

Number: 7 Author: ENDL Texas Subject: Rectangle Date: 9/2/2008 9:24:12 AM -07'00'

It might be easier to correlate the codes to the subclauses which follow if the word "mode" were added to the two i.e. instances.

Status
moverby Accepted 11/3/2008 5:06:02 PM

If the BUFFER ID field is set to 00h and the BUFFER OFFSET field is set to a value other than 00h then the SATL shall terminate the command with CHECK CONDITION status with the sense key set to ILLEGAL REQUEST with the additional sense code set to INVALID FIELD IN CDB.

The SATL may support a value other than 00h in the BUFFER ID field. If the SATL supports a value other than 00h in the BUFFER ID field the implementation shall be as defined in SPC-3.

A WRITE BUFFER command may be sent to the same buffer ID before it is read with the READ BUFFER command.

8.7.2.3 Descriptor mode

If the ALLOCATION LENGTH field is set to less than four, the SATL shall return CHECK CONDITION status with the sense key set to ILLEGIAL REQUEST and the additional sense code set to INVALID FIELD IN CDB.

If the ALLOCATION LENGTH field is set to four or greater, the SATL shall return four bytes of data describing the requested buffer, including the OFFSET BOUNDARY field and the BUFFER CAPACITY field.

If the BUFFER ID field is set to zero then the SATL shall return:

a) Offset boundary set to 9h (i.e., 512 bytes); and
b) BUFFER CAPACITY set to 200h (i.e., 512 bytes).

The SATL may support a value other than zero in the BUFFER ID field and the implementation is unspecified..

8.8 REQUEST SENSE command

8.8.1 REQUEST SENSE command overview

The REQUEST SENSE command requests any available sense data to be returned to the application client.

If the SCSI transport protocol for the SATL supports autosense (see 9.1.29), the SATL shall return sense data using autosense. Otherwise, the SATL shall return sense data in response to the REQUEST SENSE command (see SAM-2).

The SATL shall determine if there is sense data to return to the application client. To determine if there is power condition sense data to return, the SATL shall send the ATA CHECK POWER MODE command to the ATA device. If the ATA CHECK POWER MODE command does not complete with success then no power condition sense data shall be returned. If the SATL has no sense data to return, then the SATL shall complete the REQUEST SENSE command with GOOD status with the sense key set to NO SENSE and the additional sense code set to NO ADDITIONAL SENSE DATA (see SPC-3). Table 20 lists examples of conditions where the SATL has sense data to return.

Table 20 — Special Request Sense behavior reference

Emulated device state	Reference
~~Status other than GOOD to return~~	~~SPC-3~~
FORMAT UNIT in progress	8.8.2
SMART threshold exceeded condition	8.8.3
Stopped power condition ~~(i.e., ATA device in standby power management state)~~	8.8.4
Unit attention condition established	8.8.5

Number: 1 Author: Kevin_Marks Subject: Highlight Date: 8/11/2008 7:28:48 PM -07'00'

SPC-3.
s/b
SPC-4.

Status
moverby Accepted 11/3/2008 5:06:15 PM

Number: 2 Author: HPQ-RElliott Subject: Highlight Date: 9/3/2008 9:42:24 AM -07'00'

ILLEGIAL
s/b
ILLEGAL

Status
moverby Accepted 11/3/2008 5:06:10 PM

Number: 3 Author: ENDL Texas Subject: Highlight Date: 9/2/2008 9:24:18 AM -07'00'

offset boundary set s/b <smallcaps>offset boundary<\smallcaps> field set

Status
moverby Accepted 11/3/2008 5:06:38 PM

Number: 4 Author: ENDL Texas Subject: Highlight Date: 9/2/2008 9:24:24 AM -07'00'

<smallcaps>buffer capacity<\smallcaps> set s/b <smallcaps>buffer capacity<\smallcaps> field set

Status
moverby Accepted 11/3/2008 5:06:41 PM

Number: 5 Author: ENDL Texas Subject: Highlight Date: 9/2/2008 9:24:34 AM -07'00'

... return sense data using autosense. s/b ... return the sense data associated with a CHECK CONDITION status using autosense.

Status
moverby Accepted 11/3/2008 5:07:12 PM

Number: 6 Author: Kevin_Marks Subject: Highlight Date: 8/14/2008 7:42:04 AM -07'00'

3.1.29), the
s/b
3.1.29), then the

Status
moverby Accepted 11/3/2008 5:06:51 PM

Number: 7 Author: ENDL Texas Subject: Highlight Date: 9/2/2008 9:24:37 AM -07'00'

... return sense data in response to the REQUEST SENSE command (see SAM-2). s/b return contingent allegiance (see SAM-2) sense data in response to the REQUEST SENSE command.

Status
moverby Accepted 11/3/2008 5:07:29 PM

Number: 8 Author: ENDL Texas Subject: Highlight Date: 9/2/2008 9:24:40 AM -07'00'

... is sense data to return ... s/b ... is contingent allegiance (see SAM-2) sense data ...

Status
moverby Accepted 11/3/2008 5:07:37 PM

Number: 9 Author: HPQ-RElliott Subject: Note Date: 9/9/2008 11:28:54 AM -07'00'

Information on sense data contents should be moved into a new clause in chapter 5, since it is equally applicable to both REQUEST SENSE parameter data and autosense data.

Rejected: This section describes special behavior that is returned when using REQUEST SENSE to poll for the conditions listed in Table 20.

Status
moverby Rejected 9/9/2008 11:28:50 AM -07'00'

Number: 10 Author: Kevin_Marks Subject: Highlight Date: 8/14/2008 7:56:56 AM -07'00'

Temp Comment: (in any case need comment to change sentence to complete with error.)

If the ATA CHECK POWER MODE command does not complete with success then no power condition sense data shall be returned.

This one is confusing to me.

Seems CHECK POWER MODE command should always complete with success, assuming you did just not blow away an NCQ commands. Only time one would get a error is NCQ blown queue/Device Fault and I do not see the relation to a REQUEST SENSE and returning the state. Why is there no mapping from the CPM to SCSI state (need to check what Fred added)

Status
moverby Accepted 11/4/2008 10:17:18 AM

Author: moverby Subject: Sticky Note Date: 11/3/2008 5:08:59 PM

CHECK POWER MODE can fail with DF or a general abort (not sure why it would do the latter, but it could throw DF).

Author: moverby Subject: Sticky Note Date: 11/4/2008 10:17:08 AM

Accept comment, but delete sentence.

Number: 11 Author: ENDL Texas Subject: Note Date: 9/9/2008 11:21:26 AM -07'00'

It seems like paragraph 3 would be more readable if broken into several smaller paragraphs (e.g., the last two sentences would work better as two separate paragraphs)

Status
moverby Accepted 11/3/2008 5:09:20 PM

Number: 12 Author: Kevin_Marks Subject: Highlight Date: 8/14/2008 7:43:55 AM -07'00'

(see SPC-3).
s/b
(see SPC-4).

Status
moverby Accepted 11/3/2008 5:09:30 PM

Comments from page 61 continued on next page

If the BUFFER ID field is set to 00h and the BUFFER OFFSET field is set to a value other than 00h then the SATL shall terminate the command with CHECK CONDITION status with the sense key set to ILLEGAL REQUEST with the additional sense code set to INVALID FIELD IN CDB.

The SATL may support a value other than 00h in the BUFFER ID field. If the SATL supports a value other than 00h in the BUFFER ID field the implementation shall be as defined in SPC-3.

A WRITE BUFFER command may be sent to the same buffer ID before it is read with the READ BUFFER command.

8.7.2.3 Descriptor mode

If the ALLOCATION LENGTH field is set to less than four, the SATL shall return CHECK CONDITION status with the sense key set to ILLEGIAL REQUEST and the additional sense code set to INVALID FIELD IN CDB.

If the ALLOCATION LENGTH field is set to four or greater, the SATL shall return four bytes of data describing the requested buffer, including the OFFSET BOUNDARY field and the BUFFER CAPACITY field.

If the BUFFER ID field is set to zero then the SATL shall return:

a) offset boundary set to 9h (i.e., 512 bytes); and
b) BUFFER CAPACITY set to 200h (i.e., 512 bytes).

The SATL may support a value other than zero in the BUFFER ID field and the implementation is unspecified..

8.8 REQUEST SENSE command

8.8.1 REQUEST SENSE command overview

The REQUEST SENSE command requests any available sense data to be returned to the application client.

If the SCSI transport protocol for the SATL supports autosense (see 3.1.29), the SATL shall return sense data using autosense. Otherwise, the SATL shall return sense data in response to the REQUEST SENSE command (see SAM-2).

The SATL shall determine if there is sense data to return to the application client. To determine if there is power condition sense data to return, the SATL shall send the ATA CHECK POWER MODE command to the ATA device. If the ATA CHECK POWER MODE command does not complete with success then no power condition sense data shall be returned. If the SATL has no sense data to return, then the SATL shall complete the REQUEST SENSE command with GOOD status with the sense key set to NO SENSE and the additional sense code set to NO ADDITIONAL SENSE DATA (see SPC-3). Table 20 lists examples of conditions where the SATL has sense data to return.

13 Table 20 — Special Request Sense behavior reference

Emulated device state	Reference
14 ~~Status other than GOOD to return~~	15 ~~SPC-3~~
FORMAT UNIT in progress	8.8.2
SMART threshold exceeded condition	8.8.3
Stopped power condition 16 ~~(i.e., ATA device in~~ 17 ~~standby power management state)~~	8.8.4
Unit attention condition established	8.8.5

Number: 13 Author: Kevin_Marks Subject: Highlight Date: 8/14/2008 8:35:30 AM -07'00'

Table 20 — Special Request Sense behavior reference

Need to add sections 8.8.6 and 8.8.7 (idle and standby). Would also suggest rearranging 8.8.4 with 8.8.6 and 8.8.7

Status
moverby Accepted 11/3/2008 5:11:04 PM

Number: 14 Author: ENDL Texas Subject: Cross-Out Date: 9/2/2008 9:24:53 AM -07'00'

_T_Delete the first row in table 20. Its function is already covered by the text which introduces the table. Besides, the reference should be SAM-2, not SPC-3.

Status
moverby Accepted 11/3/2008 5:09:54 PM

Number: 15 Author: Kevin_Marks Subject: Highlight Date: 8/14/2008 8:02:43 AM -07'00'

SPC-3
s/b
SPC-4

Status
moverby Rejected 11/3/2008 5:10:50 PM

Author: moverby Subject: Sticky Note Date: 11/3/2008 5:10:47 PM

Rejected in favor of Ralph Weber comment to delete row.

Number: 16 Author: Kevin_Marks Subject: Cross-Out Date: 8/14/2008 8:35:37 AM -07'00'

Status
moverby Accepted 11/3/2008 5:10:04 PM

Number: 17 Author: HPQ-RElliott Subject: Highlight Date: 9/3/2008 9:42:24 AM -07'00'

standby power management state
s/b
Standby mode

when referring to the ATA device state

Status
moverby Rejected 11/3/2008 5:10:32 PM

Author: moverby Subject: Sticky Note Date: 11/3/2008 5:10:28 PM

Rejected in favor of Kevin Marks comment to delete the whole i.e.

Table 21 shows the fields in the REQUEST SENSE CDB.

Table 21 — REQUEST SENSE CDB field translations

Field	Description or reference
OPERATION CODE	Set to 03h. The SATL shall return any available sense data to the application client.
DESC	If the SATL supports the ATA PASS-THROUGH command (see 12.2), then the SATL shall support returning descriptor format sense data (i.e., specified by the DESC bit set to one) otherwise this field is unspecified (see 3.4.2).
ALLOCATION LENGTH	Unspecified (see 3.4.2)
CONTROL	6.5

~~If the SATL supports the ATA PASS-THROUGH command (see 12.2), then the SATL shall support returning descriptor format sense data (i.e., specified by the DESC bit set to one).~~

8.8.2 FORMAT UNIT in progress

If the SATL is processing a FORMAT UNIT command and the SATL receives a REQUEST SENSE command, the SATL shall return GOOD status with the sense key set to NOT READY with the additional sense code set to LOGICAL UNIT NOT READY, FORMAT IN PROGRESS. The sense key specific bytes shall be set to progress indication as defined in SBC-2 and SPC-3.

8.8.3 SMART threshold exceeded condition

If:

a) the ATA device has the SMART feature set enabled (i.e., IDENTIFY DEVICE data word 85 bit 0 is set to one);
b) the MRIE field in the Informational Exceptions Control mode page is set to 6h (see 10.1.8.2);
c) the DEXCPT bit in the Informational Exceptions Control mode page is set to zero; and
d) the most recent ATA SMART RETURN STATUS command to the ATA device indicates that the error threshold has been exceeded;

then the SATL shall:

a) return parameter data containing sense data with the sense key set to NO SENSE with the additional sense code set to HARDWARE IMPENDING FAILURE GENERAL HARD DRIVE FAILURE; and
b) complete the REQUEST SENSE command with GOOD status.

8.8.4 Stopped power condition

If the emulated logical unit is in the stopped power condition (i.e., the ATA device is in the Standby power management state) and there is no sense data to return for a previously returned CHECK CONDITION status, then the SATL shall:

1) return parameter data containing sense data with the sense key set to NO SENSE with the additional sense code set to NO ADDITIONAL SENSE DATA; and
2) complete the REQUEST SENSE command with GOOD status.

Sense data returned for a previously returned CHECK CONDITION status resulting from a media access command or a TEST UNIT READY command received when the logical unit is in the stopped power condition is described in 8.12 (i.e., the TEST UNIT READY command) and 9.11 (i.e., the START STOP UNIT command).

8.8.5 Unit attention condition established

The SATL shall:

1) return parameter data containing sense data describing the unit attention condition (see SPC-3); and

Page: 62

Number: 1 Author: Kevin_Marks Subject: Highlight Date: 8/14/2008 8:16:41 AM -07'00'

"If the SATL supports the ATA PASS-THROUGH command"
s/b
"If the SATL supports the ATA PASS-THROUGH command or CDBs supporting long LBA"

In a similar context to pass thru, if 8 byte LBA are supported, isn't the descriptor format also required to return LBA in error.

Status
moverby Accepted 11/4/2008 10:18:10 AM

Number: 2 Author: Kevin_Marks Subject: Cross-Out Date: 8/14/2008 8:17:54 AM -07'00'

Status
moverby Accepted 11/3/2008 5:13:07 PM

Number: 3 Author: ENDL Texas Subject: Note Date: 9/2/2008 9:25:03 AM -07'00'

Why are both description text and a table footnote needed to specify that support for the ATA PASS-THROUGH command mandates support for setting the desc bit to one.

Status
moverby Accepted 11/3/2008 5:12:27 PM

Author: moverby Subject: Sticky Note Date: 11/3/2008 5:12:24 PM

Agreed. Delete footnote.

Number: 4 Author: Kevin_Marks Subject: Cross-Out Date: 8/14/2008 8:17:50 AM -07'00'

Is stated above - therefore table not needed.

Status
moverby Accepted 11/3/2008 5:12:33 PM

Number: 5 Author: HPQ-RElliott Subject: Highlight Date: 9/3/2008 9:42:24 AM -07'00'

FORMAT UNIT in progress
s/b
Format operation in progress

to match terminology in sbc3r15

Status
moverby Accepted 11/3/2008 5:13:39 PM

Number: 6 Author: Kevin_Marks Subject: Highlight Date: 8/14/2008 8:20:18 AM -07'00'

"command, the"
s/b
"command, then the"

Status
moverby Accepted 11/3/2008 5:13:48 PM

Number: 7 Author: Kevin_Marks Subject: Highlight Date: 8/14/2008 8:20:50 AM -07'00'

SBC-2 and SPC-3.
s/b
SBC-3 and SPC-4.

Status
moverby Accepted 11/3/2008 5:13:54 PM

Number: 8 Author: Kevin_Marks Subject: Highlight Date: 8/14/2008 8:21:17 AM -07'00'

IDENTIFY DEVICE data
s/b
ATA IDENTIFY DEVICE data

Status
moverby Accepted 11/3/2008 5:13:59 PM

Number: 9 Author: LSI-Penokie Subject: Sticky Note Date: 8/19/2008 4:55:39 PM -07'00'

What happens if the SMART feature set is enabled and MRIE or DExcpt are some other value?

Status
moverby Rejected 11/3/2008 5:15:43 PM

Author: moverby Subject: Sticky Note Date: 11/3/2008 5:15:40 PM

I believe this is covered in the translation of the informational exceptions log page (10.1.8.2) that states any other value is unspecified.

Number: 10 Author: HPQ-RElliott Subject: Highlight Date: 9/3/2008 9:42:24 AM -07'00'

(i.e., the ATA device is in the Standby power management state)

ATA Standby can also mean SCSI standby, so this is not a good i.e. It would even be misleading as an e.g.

Status
moverby Accepted 11/3/2008 5:16:08 PM

Author: moverby Subject: Sticky Note Date: 11/3/2008 5:16:00 PM

Delete i.e.

Number: 11 Author: Kevin_Marks Subject: Highlight Date: 8/14/2008 8:31:59 AM -07'00'

"return parameter data containing sense data with the sense key set to NO SENSE with the additional sense code set to NO ADDITIONAL SENSE DATA; and"
s/b
"return parameter data containing sense data with the sense key set to NO SENSE with the additional sense code set to NO ADDITIONAL SENSE DATA or LOGICAL UNIT NOT READY, INITIALIZING COMMAND REQUIRED; and"

as per SBC-3.

Status
moverby Accepted 11/3/2008 5:16:47 PM

Comments from page 62 continued on next page

Table 21 shows the fields in the REQUEST SENSE CDB.

Table 21 — REQUEST SENSE CDB field translations

Field	Description or reference
OPERATION CODE	Set to 03h. The SATL shall return any available sense data to the application client.
DESC[a]	If the SATL supports the ATA PASS-THROUGH command (see 12.2), then the SATL shall support returning descriptor format sense data (i.e., specified by the DESC bit set to one) otherwise this field is unspecified (see 3.4.2).
ALLOCATION LENGTH	Unspecified (see 3.4.2)
CONTROL	6.5

[a] ~~If the SATL supports the ATA PASS-THROUGH command (see 12.2), then the SATL shall support returning descriptor format sense data (i.e., specified by the DESC bit set to one).~~

8.8.2 FORMAT UNIT in progress

If the SATL is processing a FORMAT UNIT command and the SATL receives a REQUEST SENSE command, the SATL shall return GOOD status with the sense key set to NOT READY with the additional sense code set to LOGICAL UNIT NOT READY, FORMAT IN PROGRESS. The sense key specific bytes shall be set to progress indication as defined in SBC-2 and SPC-3.

8.8.3 SMART threshold exceeded condition

If:

a) the ATA device has the SMART feature set enabled (i.e., IDENTIFY DEVICE data word 85 bit 0 is set to one);
b) the MRIE field in the Informational Exceptions Control mode page is set to 6h (see 10.1.8.2);
c) the DEXCPT bit in the Informational Exceptions Control mode page is set to zero; and
d) the most recent ATA SMART RETURN STATUS command to the ATA device indicates that the error threshold has been exceeded;

then the SATL shall:

a) return parameter data containing sense data with the sense key set to NO SENSE with the additional sense code set to HARDWARE IMPENDING FAILURE GENERAL HARD DRIVE FAILURE; and
b) complete the REQUEST SENSE command with GOOD status.

8.8.4 Stopped power condition

If the emulated logical unit is in the stopped power condition (i.e., the ATA device is in the Standby power management state) and there is no sense data to return for a previously returned CHECK CONDITION status, then the SATL shall:

1) return parameter data containing sense data with the sense key set to NO SENSE with the additional sense code set to NO ADDITIONAL SENSE DATA; and
2) complete the REQUEST SENSE command with GOOD status.

Sense data returned for a previously returned CHECK CONDITION status resulting from a media access command or a TEST UNIT READY command received when the logical unit is in the stopped power condition is described in 8.12 (i.e., the TEST UNIT READY command) and 9.11 (i.e., the START STOP UNIT command).

12

8.8.5 Unit attention condition established

The SATL shall:

1) return parameter data containing sense data describing the unit attention condition 13 (see SPC-3); and

Number: 12 Author: HPQ-RElliott Subject: Note Date: 9/3/2008 9:42:24 AM -07'00'

Keep 8.8.4, 8.8.6, and 8.8.7 together since they're all power conditions. 8.8.5 belongs elsewhere.

Status
moverby Accepted 11/3/2008 5:16:57 PM

Number: 13 Author: Kevin_Marks Subject: Highlight Date: 8/14/2008 8:33:02 AM -07'00'

(see SPC-3);
s/b
(see SPC-4);

Status
moverby Accepted 11/3/2008 5:17:02 PM

2) complete the REQUEST SENSE command with GOOD status.

8.8.6 IDLE power condition

If the emulated logical unit is in the IDLE power condition (e.g., after returning GOOD status to a START STOP UNIT command with the power condition field set to IDLE) then the SATL shall return GOOD status with the sense key set to NO SENSE with the additional sense code set to:

a) LOW POWER CONDITION ON if the reason for the entry into the idle power condition is unknown;
b) POWER CONDITION CHANGE TO IDLE if the ATA CHECK POWER MODE command indicates idle power condition; or
c) IDLE CONDITION ACTIVATED BY COMMAND if the logical unit entered the idle power condition due to a START STOP UNIT command or receipt of a command requiring the idle power condition.

8.8.7 STANDBY power condition

If the emulated logical unit is in the STANDBY power condition (e.g., after returning GOOD status to a START STOP UNIT command with the power condition field set to STANDBY) then the SATL shall return GOOD status with the sense key set to NO SENSE with the additional sense code set to:

a) LOW POWER CONDITION ON if the reason for the entry into the standby power condition is unknown;
b) POWER CONDITION CHANGE TO STANDBY if the ATA CHECK POWER MODE command indicates standby power condition; or
c) STANDBY CONDITION ACTIVATED BY COMMAND if the logical unit entered the standby power condition due to a START STOP UNIT command or receipt of a command requiring the standby power condition.

8.9 SECURITY PROTOCOL IN command

8.9.1 SECURITY PROTOCOL IN command overview

The SECURITY PROTOCOL IN command provides a means for the application client to retrieve security information from a SCSI target device. Table 22 shows the translation for fields specified in the SECURITY PROTOCOL IN CDB.

Table 22 — SECURITY PROTOCOL IN CDB field translation

Field	Description or Reference
OPERATION CODE	Set to A2h. The SATL shall send the ATA TRUSTED RECEIVE command or ~~the~~ ATA TRUSTED RECEIVE DMA command to the ATA device.
SECURITY PROTOCOL	8.9.1.1
SECURITY PROTOCOL SPECIFIC	8.9.1.2
INC_512	8.9.1.3
ALLOCATION LENGTH	8.9.1.3
CONTROL	6.5

8.9.1.1 SECURITY PROTOCOL field

The SECURITY PROTOCOL field shall be copied to the ATA Security_Protocol field.

8.9.1.2 SECURITY PROTOCOL SPECIFIC field

The SECURITY PROTOCOL SPECIFIC field shall be copied to the ATA SP_Specific field.

Number: 1 Author: Kevin_Marks Subject: Highlight Date: 8/14/2008 8:36:37 AM -07'00'

8.8.6 IDLE power condition
s/b
8.8.6 Idle power condition

Status
moverby Accepted 11/3/2008 5:17:26 PM

Number: 2 Author: HPQ-RElliott Subject: Highlight Date: 9/3/2008 9:42:24 AM -07'00'

IDLE
s/b
Idle

Status
moverby Accepted 11/3/2008 5:17:21 PM

Number: 3 Author: HPQ-RElliott Subject: Highlight Date: 9/3/2008 9:42:24 AM -07'00'

IDLE power condition
s/b
lowercase

Status
moverby Accepted 11/3/2008 5:17:30 PM

Number: 4 Author: ENDL Texas Subject: Highlight Date: 9/2/2008 9:25:10 AM -07'00'

IDLE) then s/b IDLE), then

Status
moverby Accepted 11/3/2008 5:17:47 PM

Number: 5 Author: Kevin_Marks Subject: Highlight Date: 8/14/2008 8:38:54 AM -07'00'

IDLE) then
s/b
IDLE), then

Status
moverby Accepted 11/3/2008 5:17:44 PM

Number: 6 Author: LSI-Penokie Subject: Highlight Date: 8/19/2008 4:57:19 PM -07'00'

Should be << IDLE), then the SATL >>

Status
moverby Accepted 11/3/2008 5:17:40 PM

Number: 7 Author: HPQ-RElliott Subject: Highlight Date: 9/3/2008 9:42:24 AM -07'00'

power condition field
s/b
smallcaps

Status
moverby Accepted 11/3/2008 5:17:57 PM

Number: 8 Author: HPQ-RElliott Subject: Highlight Date: 9/3/2008 9:42:24 AM -07'00'

idle power condition
s/b
Idle mode

(or whatever ATA-ACS2 decides is the preferred terminology)

Status
moverby Accepted 11/3/2008 5:19:01 PM

Author: moverby Subject: Sticky Note Date: 11/3/2008 5:18:58 PM

s/b Idle state

Number: 9 Author: Kevin_Marks Subject: Sticky Note Date: 8/14/2008 8:46:39 AM -07'00'

in 8.8.6 a) and b) seem to be able to both be true. From what I can tell ATA CPM does not give a reason for being in idle, only that it is. If it were based on a timer, does the SATL know that it when to idle mode. Why is the IDLE CONDITION ACTIVATED BY TIMER not included?

Status
moverby Accepted 11/4/2008 10:21:22 AM

Author: moverby Subject: Sticky Note Date: 11/3/2008 5:20:38 PM

There is no idle timer in ATA. I would suggest deleting a) and just keeping b.

Number: 10 Author: Kevin_Marks Subject: Highlight Date: 8/14/2008 8:37:03 AM -07'00'

8.8.7 STANDBY power condition
s/b
8.8.7 Standby power condition

Status
moverby Accepted 11/3/2008 5:20:53 PM

Number: 11 Author: HPQ-RElliott Subject: Highlight Date: 9/3/2008 9:42:24 AM -07'00'

STANDBY
s/b
Standby

Status
moverby Accepted 11/3/2008 5:20:48 PM

Number: 12 Author: HPQ-RElliott Subject: Highlight Date: 9/3/2008 9:42:24 AM -07'00'

STANDBY power condition
s/b
lowercase

Status
moverby Accepted 11/3/2008 5:20:58 PM

Comments from page 63 continued on next page

2) complete the REQUEST SENSE command with GOOD status.

8.8.6 IDLE power condition

If the emulated logical unit is in the IDLE power condition (e.g., after returning GOOD status to a START STOP UNIT command with the power condition field set to IDLE) then the SATL shall return GOOD status with the sense key set to NO SENSE with the additional sense code set to:

a) LOW POWER CONDITION ON if the reason for the entry into the idle power condition is unknown;
b) POWER CONDITION CHANGE TO IDLE if the ATA CHECK POWER MODE command indicates idle power condition; or
c) IDLE CONDITION ACTIVATED BY COMMAND if the logical unit entered the idle power condition due to a START STOP UNIT command or receipt of a command requiring the idle power condition.

8.8.7 STANDBY power condition

If the emulated logical unit is in the STANDBY power condition (e.g., after returning GOOD status to a START STOP UNIT command with the power condition field set to STANDBY) then the SATL shall return GOOD status with the sense key set to NO SENSE with the additional sense code set to:

a) LOW POWER CONDITION ON if the reason for the entry into the standby power condition is unknown;
b) POWER CONDITION CHANGE TO STANDBY if the ATA CHECK POWER MODE command indicates standby power condition; or
c) STANDBY CONDITION ACTIVATED BY COMMAND if the logical unit entered the standby power condition due to a START STOP UNIT command or receipt of a command requiring the standby power condition.

8.9 SECURITY PROTOCOL IN command

8.9.1 SECURITY PROTOCOL IN command overview

The SECURITY PROTOCOL IN command provides a means for the application client to retrieve security information from a SCSI target device. Table 22 shows the translation for fields specified in the SECURITY PROTOCOL IN CDB.

Table 22 — SECURITY PROTOCOL IN CDB field translation

Field	Description or Reference
OPERATION CODE	Set to A2h. The SATL shall send the ATA TRUSTED RECEIVE command or ~~the~~ ATA TRUSTED RECEIVE DMA command to the ATA device.
SECURITY PROTOCOL	8.9.1.1
SECURITY PROTOCOL SPECIFIC	8.9.1.2
INC_512	8.9.1.3
ALLOCATION LENGTH	8.9.1.3
CONTROL	6.5

8.9.1.1 SECURITY PROTOCOL field

The SECURITY PROTOCOL field shall be copied to the ATA Security_Protocol field.

8.9.1.2 SECURITY PROTOCOL SPECIFIC field

The SECURITY PROTOCOL SPECIFIC field shall be copied to the ATA SP_Specific field.

Number: 13 Author: ENDL Texas Subject: Highlight Date: 9/2/2008 9:25:15 AM -07'00'

STANDBY) then s/b STANDBY), then

Status
moverby Accepted 11/3/2008 5:21:10 PM

Number: 14 Author: LSI-Penokie Subject: Highlight Date: 8/19/2008 4:58:04 PM -07'00'

Should be << STANDBY), then the S >>

Status
moverby Accepted 11/3/2008 5:21:05 PM

Number: 15 Author: HPQ-RElliott Subject: Highlight Date: 9/3/2008 9:42:24 AM -07'00'

power condition field
s/b
smallcaps

Status
moverby Accepted 11/3/2008 5:21:15 PM

Number: 16 Author: Kevin_Marks Subject: Sticky Note Date: 8/14/2008 8:47:56 AM -07'00'

in 8.8.7 a) and b) seem to be able to both be true. From what I can tell ATA CPM does not give a reason for being in standby, only that it is. If it were based on a timer, does the SATL know that it when to standby mode. Why is the STANDBY CONDITION ACTIVATED BY TIMER not included?

Status
moverby Accepted 11/4/2008 10:22:10 AM

Author: moverby Subject: Sticky Note Date: 11/3/2008 5:22:10 PM

Recommend deleting a) here. As to the STANDBY CONDITION ACTIVATED BY TIMER, there is no way to know if STANDBY was entered because of the timer or other event.

Number: 17 Author: HPQ-RElliott Subject: Highlight Date: 9/3/2008 9:42:24 AM -07'00'

standby power condition
s/b
Standby mode

when referring to the ATA device state. (ATA8-ACS is inconsistent, sometimes using state, power management mode, etc.)

Status
moverby Accepted 11/3/2008 5:22:32 PM

Author: moverby Subject: Sticky Note Date: 11/3/2008 5:22:28 PM

s/b standby state

Number: 18 Author: HPQ-RElliott Subject: Note Date: 9/3/2008 9:42:24 AM -07'00'

8.9.1 has "hanging paragraphs"

There should be no 8.9.1 if there is no 8.9.2.

If a section has subsections, it cannot have introductory text.

Status
moverby Accepted 11/3/2008 5:24:47 PM

Author: moverby Subject: Sticky Note Date: 11/3/2008 5:24:40 PM

Delete 8.9.1 header and promote others.

Author: moverby Subject: Sticky Note Date: 11/3/2008 5:24:42 PM

Number: 19 Author: Kevin_Marks Subject: Cross-Out Date: 8/15/2008 12:22:16 PM -07'00'

Status
moverby Accepted 11/3/2008 5:25:08 PM

Number: 20 Author: Kevin_Marks Subject: Highlight Date: 8/28/2008 1:18:33 PM -07'00'

OPERATION CODE -->

Wondering if we need a table note that says if allocation length = 0, then use ATA TRUSTED NON-DATA command as stated in allocation length section.

Status
moverby Accepted 11/3/2008 5:27:38 PM

Author: moverby Subject: Sticky Note Date: 11/3/2008 5:27:35 PM

Yes. s/b The SATL shall send the ATA TRUSTED RECIEVE or ATA TRUSTED RECEIVE DMA command to the device if <small caps> allocation length </small caps> is non-zero. Otherwise, the SATL shall send the ATA TRUSTED NON-DATA command to the ATA device.

Author: moverby Subject: Sticky Note Date: 11/4/2008 10:23:07 AM

add field after allocation length.

Number: 21 Author: HPQ-RElliott Subject: Highlight Date: 9/3/2008 9:42:24 AM -07'00'

Security_Protocol

ata8-acs-r6 doesn't use _

Status
moverby Accepted 11/3/2008 5:48:05 PM

Number: 22 Author: HPQ-RElliott Subject: Highlight Date: 9/3/2008 9:42:24 AM -07'00'

SP_Specific

ata8-acs-r6 doesn't use _

Status
moverby Accepted 11/3/2008 5:48:11 PM

8.9.1.3 ALLOCATION LENGTH field

8.9.1.3.1 ALLOCATION LENGTH field translation overview

The translation of ALLOCATION LENGTH varies based on the value of SECURITY PROTOCOL. If allocation length is zero, the SATL shall use the ATA TRUSTED NON-DATA command with bit 24 of the LBA field set to one, instead of TRUSTED RECEIVE or TRUSTED RECEIVE DMA.

8.9.1.3.2 SECURITY PROTOCOL 00h - 06h

If INC_512 is set to one:

a) If ALLOCATION LENGTH is greater than FFFFh, then the SATL shall return CHECK CONDITION status with the sense key set to ILLEGAL REQUEST and the additional sense code set to INVALID FIELD IN CDB;
b) Otherwise, the ATA Transfer_Length field shall be set to ALLOCATION LENGTH (15:0). After completion of the ATA TRUSTED RECEIVE or ATA TRUSTED RECEIVE DMA command, the data shall be transferred to the SCSI application client.

If INC_512 is set to zero:

a) If ALLOCATION LENGTH is greater than 1FF_FE00h, then the SATL shall return CHECK CONDITION status with the sense key set to ILLEGAL REQUEST and the additional sense code set to INVALID FIELD IN CDB;
b) otherwise, the ATA Transfer_Length field shall be translated from bytes to a number of padded 512-byte units from the result of the following calculation:

ATA Transfer_Length(15:0) = ((ALLOCATION LENGTH + 511) / 512)

After successful completion of the ATA TRUSTED RECEIVE or ATA TRUSTED RECEIVE DMA command, the data shall be transferred to the SCSI application client up to the specified ALLOCATION LENGTH number of bytes.

8.9.1.3.3 SECURITY PROTOCOL values 07h - FFh

The translation of this field is unspecified (see 3.4.2).

8.10 SECURITY PROTOCOL OUT command

8.10.1 SECURITY PROTOCOL OUT command overview

The SECURITY PROTOCOL OUT command provides a means for the application client to send security information to a SCSI target device. Table 23 shows the translation for fields specified in the SECURITY PROTOCOL OUT CDB.

Table 23 — SECURITY PROTOCOL OUT CDB field translation

Field	Description or Reference
OPERATION CODE	Set to A2h. The SATL shall send the ATA TRUSTED RECEIVE command or the ATA TRUSTED RECEIVE DMA command to the ATA device.
SECURITY PROTOCOL	8.9.1.1
SECURITY PROTOCOL SPECIFIC	8.9.1.2
INC_512	8.9.1.3
TRANSFER LENGTH	8.9.1.3
CONTROL	6.5

Number: 1 Author: ENDL Texas Subject: Note Date: 9/2/2008 8:21:23 AM -07'00'

It is not clear that the translation of the allocation length field should be differentiated based on the contents of the security protocol field. The translation specified for security protocol codes 00h to 06h appears to be globally applicable.

Status
moverby Rejected 11/3/2008 5:50:08 PM
Author: moverby Subject: Sticky Note Date: 11/3/2008 5:50:04 PM
Agreed that 00h to 06h is universal, however the others may or may not be the same. I think it is important to note and keep clear that you cannot look at allocation length without context.

Number: 2 Author: LSI-Penokie Subject: Highlight Date: 8/19/2008 5:00:39 PM -07'00'

ALLOCATION LENGTH should be not be small caps here

Status
moverby Accepted 11/3/2008 5:52:01 PM

Number: 3 Author: Kevin_Marks Subject: Highlight Date: 8/15/2008 1:03:08 PM -07'00'

ALLOCATION LENGTH varies
s/b
allocation length varies

Status
moverby Accepted 11/3/2008 5:51:57 PM

Number: 4 Author: Kevin_Marks Subject: Highlight Date: 8/15/2008 1:03:51 PM -07'00'

the value of SECURITY PROTOCOL.
s/b
the value contained in the SECURITY PROTOCOL field.

Status
moverby Accepted 11/3/2008 5:52:10 PM

Number: 5 Author: LSI-Penokie Subject: Highlight Date: 8/19/2008 5:01:03 PM -07'00'

SECURITY PROTOCOL should not be small caps here.

Status
moverby Rejected 11/3/2008 5:51:19 PM
Author: moverby Subject: Sticky Note Date: 11/3/2008 5:51:16 PM
Rejected in favor on Rob Elliot comment to add field, which would require the use of small caps.

Number: 6 Author: HPQ-RElliott Subject: Highlight Date: 9/3/2008 9:42:24 AM -07'00'

SECURITY PROTOCOL
s/b
the SECURITY PROTOCOL field

Status
moverby Accepted 11/3/2008 5:50:42 PM

Number: 7 Author: Kevin_Marks Subject: Highlight Date: 8/15/2008 1:04:49 PM -07'00'

allocation length is
s/b
the ALLOCATION LENGTH field is set to

Status
moverby Accepted 11/3/2008 5:50:28 PM

Number: 8 Author: HPQ-RElliott Subject: Highlight Date: 9/3/2008 9:42:24 AM -07'00'

allocation length is zero,
s/b
the ALLOCATION LENGTH field is set to zero, then

Status
moverby Accepted 11/3/2008 5:50:13 PM

Number: 9 Author: Kevin_Marks Subject: Highlight Date: 8/15/2008 12:21:49 PM -07'00'

of TRUSTED RECEIVE or TRUSTED RECEIVE DMA.
s/b
of ATA TRUSTED RECEIVE command or ATA TRUSTED RECEIVE DMA command.

Status
moverby Accepted 11/3/2008 5:52:42 PM
Author: moverby Subject: Sticky Note Date: 11/3/2008 5:52:39 PM
s/b ATA TRUSTED RECEIVE or ATA TRUSTED RECEIVE DMA command.

Number: 10 Author: Kevin_Marks Subject: Highlight Date: 8/15/2008 11:42:05 AM -07'00'

8.9.1.3.2 SECURITY PROTOCOL 00h - 06h

I'm not sure that Protocol ID 01h-06h belong in this spec as they belong to TCG.

Status
moverby Accepted 11/4/2008 10:25:27 AM
Author: moverby Subject: Sticky Note Date: 11/4/2008 10:25:25 AM
Reduce to just security protocol 00h.

Number: 11 Author: LSI-Penokie Subject: Highlight Date: 8/19/2008 5:01:44 PM -07'00'

SECURITY PROTOCOL should not be small caps here.

Status
moverby Accepted 11/3/2008 5:53:13 PM

Number: 12 Author: HPQ-RElliott Subject: Note Date: 9/3/2008 9:42:24 AM -07'00'

INC_512 was proposed as necessary to ease SAT translations. SAT-2 has no problem defining that the SATL multiply by 512 when needed, however. I suggest the SAT WG consider if INC_512 should be dropped from SPC-4.

Comments from page 64 continued on next page

8.9.1.3 ALLOCATION LENGTH field

8.9.1.3.1 ALLOCATION LENGTH field translation overview

The translation of ALLOCATION LENGTH varies based on the value of SECURITY PROTOCOL. If allocation length is zero, the SATL shall use the ATA TRUSTED NON-DATA command with bit 24 of the LBA field set to one, instead of TRUSTED RECEIVE or TRUSTED RECEIVE DMA.

8.9.1.3.2 SECURITY PROTOCOL 00h - 06h

If INC_512 is set to one:

a) If ALLOCATION LENGTH is greater than FFFFh, then the SATL shall return CHECK CONDITION status with the sense key set to ILLEGAL REQUEST and the additional sense code set to INVALID FIELD IN CDB;
b) Otherwise, the ATA Transfer_Length field shall be set to ALLOCATION LENGTH (15:0). After completion of the ATA TRUSTED RECEIVE or ATA TRUSTED RECEIVE DMA command, the data shall be transferred to the SCSI application client.

If INC_512 is set to zero:

a) If ALLOCATION LENGTH is greater than 1FF_FE00h, then the SATL shall return CHECK CONDITION status with the sense key set to ILLEGAL REQUEST and the additional sense code set to INVALID FIELD IN CDB;
b) otherwise, the ATA Transfer_Length field shall be translated from bytes to a number of padded 512-byte units from the result of the following calculation:

ATA Transfer_Length(15:0) = ((ALLOCATION LENGTH + 511) / 512)

After successful completion of the ATA TRUSTED RECEIVE or ATA TRUSTED RECEIVE DMA command, the data shall be transferred to the SCSI application client up to the specified ALLOCATION LENGTH number of bytes.

8.9.1.3.3 SECURITY PROTOCOL values 07h - FFh

The translation of this field is unspecified (see 3.4.2).

8.10 SECURITY PROTOCOL OUT command

8.10.1 SECURITY PROTOCOL OUT command overview

The SECURITY PROTOCOL OUT command provides a means for the application client to send security information to a SCSI target device. Table 23 shows the translation for fields specified in the SECURITY PROTOCOL OUT CDB.

Table 23 — SECURITY PROTOCOL OUT CDB field translation

Field	Description or Reference
OPERATION CODE	Set to A2h. The SATL shall send the ATA TRUSTED RECEIVE command or the ATA TRUSTED RECEIVE DMA command to the ATA device.
SECURITY PROTOCOL	8.9.1.1
SECURITY PROTOCOL SPECIFIC	8.9.1.2
INC_512	8.9.1.3
TRANSFER LENGTH	8.9.1.3
CONTROL	6.5

Status
moverby Rejected 11/3/2008 5:53:32 PM
Author: moverby Subject: Sticky Note Date: 9/9/2008 11:35:02 AM -07'00'
Rejected: The purpose of INC_512 was to ease SCSI implementations by eliminating the need to transfer padded data buffers when in a native SCSI environment.

Status
moverby Rejected 9/9/2008 11:36:53 AM -07'00'
Number: 13 Author: LSI-Penokie Subject: Highlight Date: 8/19/2008 5:05:38 PM -07'00'
Should be << If the INC_512 bit is set to one: >>

Status
moverby Accepted 11/3/2008 5:54:10 PM
Number: 14 Author: Kevin_Marks Subject: Highlight Date: 8/15/2008 12:20:18 PM -07'00'
INC_512 is
s/b
INC_512 bit is

Status
moverby Rejected 11/3/2008 5:54:05 PM
Author: moverby Subject: Sticky Note Date: 11/3/2008 5:54:01 PM
Rejected in favor of George Penokie comment on the field name.

Number: 15 Author: Kevin_Marks Subject: Highlight Date: 8/15/2008 1:07:15 PM -07'00'
ALLOCATION LENGTH is greater than FFFFh,
s/b
the ALLOCATION LENGTH field contains a value greater than FFFFh,

Status
moverby Accepted 11/3/2008 5:54:17 PM
Number: 16 Author: LSI-Penokie Subject: Highlight Date: 8/19/2008 5:01:54 PM -07'00'
ALLOCATION LENGTH should not be small caps here.

Status
moverby Accepted 11/3/2008 5:54:29 PM
Number: 17 Author: Kevin_Marks Subject: Sticky Note Date: 8/15/2008 12:41:14 PM -07'00'
a), b) without and or or?

Status
moverby Accepted 11/4/2008 10:25:50 AM
Author: moverby Subject: Sticky Note Date: 11/3/2008 5:55:17 PM
Collapse into a paragraph instead of an a) b) list.

Number: 18 Author: Kevin_Marks Subject: Highlight Date: 8/15/2008 12:31:01 PM -07'00'
"After completion of the ATA TRUSTED RECEIVE or ATA TRUSTED RECEIVE DMA command,"
s/b
"After the ATA TRUSTED RECEIVE command or ATA TRUSTED RECEIVE DMA command completes without error,"

Status
moverby Accepted 11/3/2008 5:55:46 PM
Number: 19 Author: Kevin_Marks Subject: Highlight Date: 8/15/2008 12:28:20 PM -07'00'
set to ALLOCATION LENGTH (15:0).
s/b
set to the contents of bits (15:0) of the ALLOCATION LENGTH field.

Status
moverby Accepted 11/3/2008 5:55:32 PM
Number: 20 Author: LSI-Penokie Subject: Highlight Date: 8/19/2008 5:02:14 PM -07'00'
ALLOCATION LENGTH should not be small caps here.

Status
moverby Rejected 11/3/2008 5:56:12 PM
Author: moverby Subject: Sticky Note Date: 11/3/2008 5:56:06 PM
Rejected in favor of Kevin Marks rewrite of this sentence.

Number: 21 Author: LSI-Penokie Subject: Highlight Date: 8/19/2008 5:05:32 PM -07'00'
Should be << If the INC_512 bit is set to zero: >>

Status
moverby Accepted 11/3/2008 5:56:59 PM
Number: 22 Author: Kevin_Marks Subject: Highlight Date: 8/15/2008 12:20:24 PM -07'00'
INC_512 is
s/b
INC_512 bit is

Status
moverby Rejected 11/3/2008 5:56:53 PM
Author: moverby Subject: Sticky Note Date: 11/3/2008 5:56:49 PM
Rejected in favor of George Penokie rewrite

Number: 23 Author: Kevin_Marks Subject: Highlight Date: 8/15/2008 1:13:04 PM -07'00'
ALLOCATION LENGTH is greater than 1FF_FE00h
s/b
the ALLOCATION LENGTH field contains a value greater than 1FF_FE00h

Status
moverby Accepted 11/3/2008 5:57:04 PM
Number: 24 Author: LSI-Penokie Subject: Highlight Date: 8/19/2008 5:02:44 PM -07'00'
ALLOCATION LENGTH should not be small caps here.

Comments from page 64 continued on next page

8.9.1.3 ALLOCATION LENGTH field

8.9.1.3.1 ALLOCATION LENGTH field translation overview

The translation of ALLOCATION LENGTH varies based on the value of SECURITY PROTOCOL. If allocation length is zero, the SATL shall use the ATA TRUSTED NON-DATA command with bit 24 of the LBA field set to one, instead of TRUSTED RECEIVE or TRUSTED RECEIVE DMA.

8.9.1.3.2 SECURITY PROTOCOL 00h - 06h

If INC_512 is set to one:

a) If ALLOCATION LENGTH is greater than FFFFh, then the SATL shall return CHECK CONDITION status with the sense key set to ILLEGAL REQUEST and the additional sense code set to INVALID FIELD IN CDB;
b) Otherwise, the ATA Transfer_Length field shall be set to ALLOCATION LENGTH (15:0). After completion of the ATA TRUSTED RECEIVE or ATA TRUSTED RECEIVE DMA command, the data shall be transferred to the SCSI application client.

If INC_512 is set to zero:

a) If ALLOCATION LENGTH is greater than 1FF_FE00h, then the SATL shall return CHECK CONDITION status with the sense key set to ILLEGAL REQUEST and the additional sense code set to INVALID FIELD IN CDB; 25
b) otherwise, the ATA Transfer_Length field shall be translated from bytes to a number of padded 512-byte units from the result of the following calculation:

ATA Transfer_Length(15:0) = ((ALLOCATION LENGTH + 511) / 512)

After successful completion of the ATA TRUSTED RECEIVE or ATA TRUSTED RECEIVE DMA command, the data shall be transferred to the SCSI application client up to the specified ALLOCATION LENGTH number of bytes.

8.9.1.3.3 SECURITY PROTOCOL values 07h - FFh

The translation of this field is unspecified (see 3.4.2).

8.10 SECURITY PROTOCOL OUT command

8.10.1 SECURITY PROTOCOL OUT command overview

The SECURITY PROTOCOL OUT command provides a means for the application client to send security information to a SCSI target device. Table 23 shows the translation for fields specified in the SECURITY PROTOCOL OUT CDB.

Table 23 — SECURITY PROTOCOL OUT CDB field translation

Field	Description or Reference
OPERATION CODE	Set to A2h. The SATL shall send the ATA TRUSTED RECEIVE command or the ATA TRUSTED RECEIVE DMA command to the ATA device.
SECURITY PROTOCOL	8.9.1.1
SECURITY PROTOCOL SPECIFIC	8.9.1.2
INC_512	8.9.1.3
TRANSFER LENGTH	8.9.1.3
CONTROL	6.5

Status
moverby Rejected 11/3/2008 5:57:29 PM
Author: moverby Subject: Sticky Note Date: 11/3/2008 5:57:25 PM
Rejected in favor of Kevin Marks rewrite of this sentence.

Number: 25 Author: Kevin_Marks Subject: Sticky Note Date: 8/15/2008 12:54:49 PM -07'00'
a), b) without and or or?

Status
moverby Accepted 11/4/2008 10:25:57 AM
Author: moverby Subject: Sticky Note Date: 11/3/2008 5:57:49 PM
Suggest collapsing into paragraph without a) b) list.

8.10.1.1 SECURITY PROTOCOL field

The SECURITY PROTOCOL field shall be copied to the ATA Security_Protocol field.

8.10.1.2 SECURITY PROTOCOL SPECIFIC field

The SECURITY PROTOCOL SPECIFIC field shall be copied to the ATA SP_Specific field.

8.10.1.3 TRANSFER LENGTH field

8.10.1.3.1 SECURITY PROTOCOL field translation overview

The translation of TRANSFER LENGTH varies based on the value of SECURITY PROTOCOL. If transfer length is zero, the SATL shall use the ATA TRUSTED NON-DATA command with bit 24 of the LBA field set to zero, instead of TRUSTED SEND or TRUSTED SEND DMA.

8.10.1.3.2 SECURITY PROTOCOL values 00h - 06h

If the INC_512 is set to one:

a) If TRANSFER LENGTH is greater than FFFFh, then the SATL shall return CHECK CONDITION status with the sense key set to ILLEGAL REQUEST and the additional sense code set to INVALID FIELD IN CDB;
b) Otherwise, the ATA Transfer_Length field shall be set to ALLOCATION LENGTH (15:0). The ATA TRUSTED SEND or ATA TRUSTED SEND DMA command shall transfer the data.

If the INC_512 bit is set to zero:

a) If TRANSFER LENGTH is greater than 1FF_FE00h, then the SATL shall return CHECK CONDITION status with the sense key set to ILLEGAL REQUEST and the additional sense code set to INVALID FIELD IN CDB;
b) Otherwise, the ATA Transfer_Length field shall be translated from bytes to a number of padded 512-byte units from the result of the following calculation:

ATA Transfer_Length(15:0) = ((TRANSFER LENGTH + 511) / 512)

The final data block may be padded (see SPC-4). The ATA TRUSTED SEND or ATA TRUSTED SEND DMA command shall transfer the padded data for ATA Transfer_Length number of data blocks.

8.10.1.3.3 SECURITY PROTOCOL values 07h - FFh

The translation of this field is unspecified (see 3.4.2).

Author: moverby Subject: Sticky Note Date: 11/4/2008 10:30:28 AM

Collapse into paragraph

8.9.1.3 ALLOCATION LENGTH field

8.9.1.3.1 ALLOCATION LENGTH field translation overview

The translation of ALLOCATION LENGTH varies based on the value of SECURITY PROTOCOL. If allocation length is zero, the SATL shall use the ATA TRUSTED NON-DATA command with bit 24 of the LBA field set to one, instead of TRUSTED RECEIVE or TRUSTED RECEIVE DMA.

8.9.1.3.2 SECURITY PROTOCOL 00h - 06h

If INC_512 is set to one:

a) If ALLOCATION LENGTH is greater than FFFFh, then the SATL shall return CHECK CONDITION status with the sense key set to ILLEGAL REQUEST and the additional sense code set to INVALID FIELD IN CDB;
b) Otherwise, the ATA Transfer_Length field shall be set to ALLOCATION LENGTH (15:0). After completion of the ATA TRUSTED RECEIVE or ATA TRUSTED RECEIVE DMA command, the data shall be transferred to the SCSI application client.

If INC_512 is set to zero:

a) If ALLOCATION LENGTH is greater than 1FF_FE00h, then the SATL shall return CHECK CONDITION status with the sense key set to ILLEGAL REQUEST and the additional sense code set to INVALID FIELD IN CDB;
b) otherwise, the ATA Transfer_Length field shall be translated from bytes to a number of padded 512-byte units from the result of the following calculation:

ATA Transfer_Length(15:0) = (ALLOCATION LENGTH + 511) / 512)

After successful completion of the ATA TRUSTED RECEIVE or ATA TRUSTED RECEIVE DMA command, the data shall be transferred to the SCSI application client up to the specified ALLOCATION LENGTH number of bytes.

8.9.1.3.3 SECURITY PROTOCOL values 07h - FFh

The translation of this field is unspecified (see 3.4.2).

8.10 SECURITY PROTOCOL OUT command

8.10.1 SECURITY PROTOCOL OUT command overview

The SECURITY PROTOCOL OUT command provides a means for the application client to send security information to a SCSI target device. Table 23 shows the translation for fields specified in the SECURITY PROTOCOL OUT CDB.

Table 23 — SECURITY PROTOCOL OUT CDB field translation

Field	Description or Reference
OPERATION CODE	Set to A2h. The SATL shall send the ATA TRUSTED RECEIVE command or the ATA TRUSTED RECEIVE DMA command to the ATA device.
SECURITY PROTOCOL	8.9.1.1
SECURITY PROTOCOL SPECIFIC	8.9.1.2
INC_512	8.9.1.3
TRANSFER LENGTH	8.9.1.3
CONTROL	6.5

Number: 1 Author: HPQ-RElliott Subject: Highlight Date: 9/3/2008 9:42:24 AM -07'00'
Transfer_Length

ata8-acs-r6 doesn't use _

Status
moverby Accepted 11/3/2008 5:57:54 PM

Number: 2 Author: HPQ-RElliott Subject: Highlight Date: 9/3/2008 9:42:24 AM -07'00'
Transfer_Length

ata8-acs-r6 doesn't use _

Status
moverby Accepted 11/3/2008 5:58:36 PM

Number: 3 Author: Kevin_Marks Subject: Highlight Date: 8/15/2008 12:47:00 PM -07'00'
(ALLOCATION LENGTH +
s/b
(ALLOCATION LENGTH field +

Status
moverby Rejected 11/3/2008 5:58:32 PM
Author: moverby Subject: Sticky Note Date: 11/3/2008 5:58:28 PM
Rejected in favor of George Penokie comment.

Number: 4 Author: LSI-Penokie Subject: Highlight Date: 8/19/2008 5:03:01 PM -07'00'
(ALLOCATION LENGTH should not be small caps here.

Status
moverby Accepted 11/3/2008 5:58:16 PM

Number: 5 Author: Kevin_Marks Subject: Highlight Date: 8/15/2008 12:54:08 PM -07'00'
"After successful completion of the ATA TRUSTED RECEIVE or ATA TRUSTED RECEIVE DMA command, the data shall be transferred to the SCSI application client up to the specified ALLOCATION LENGTH number of bytes."
s/b
"After the ATA TRUSTED RECEIVE command or ATA TRUSTED RECEIVE DMA command completes without error, the data shall be transferred to the SCSI application client up to the specified allocation length number of bytes."

Assume this sentence only goes with the INC_512=0. Its not that clear.

Status
moverby Accepted 11/3/2008 5:59:52 PM
Author: moverby Subject: Sticky Note Date: 11/3/2008 5:59:49 PM
Yes, this is intended to go with INC_512 = 0. With removal of the a) b) list this should be clearer.

Number: 6 Author: HPQ-RElliott Subject: Highlight Date: 9/3/2008 9:42:24 AM -07'00'
specified ALLOCATION LENGTH number of bytes
s/b
number of bytes specified by the ALLOCATION LENGTH field

with caution for how INC_512 makes that violate the standard SCSI definition for ALLOCATION LENGTH (which should never have been done - the field should have a different name in SPC-4)

Status
moverby Rejected 9/9/2008 1:28:17 PM -07'00'
Author: moverby Subject: Sticky Note Date: 9/9/2008 12:53:05 PM -07'00'
Rejected: For the same reasons as the previous INC_512 comments.

Status
moverby None 9/9/2008 1:28:23 PM -07'00'

Number: 7 Author: LSI-Penokie Subject: Highlight Date: 8/19/2008 5:04:34 PM -07'00'
This << specified ALLOCATION LENGTH number of bytes >> should be << number of bytes specified in the ALLOCATION LENGTH field. >>

Status
moverby Accepted 11/3/2008 6:00:03 PM

Number: 8 Author: moverby Subject: Highlight Date: 9/9/2008 3:38:55 PM -07'00'
This clause should have a reference to the security protocol for ATA security protocol

Status
moverby Accepted 11/3/2008 6:00:29 PM

Number: 9 Author: Kevin_Marks Subject: Highlight Date: 8/15/2008 1:00:16 PM -07'00'
07h - FFh
s/b
01h - FFh

based on assumption that 01h-06h should not be defined above.

Status
moverby Accepted 11/4/2008 10:26:30 AM
Author: moverby Subject: Sticky Note Date: 11/4/2008 10:26:28 AM
Accepted based on reducing protocols defined to 00h.

Number: 10 Author: LSI-Penokie Subject: Highlight Date: 8/19/2008 5:06:16 PM -07'00'
SECURITY PROTOCOL should not be small caps here.

Status
moverby Accepted 11/3/2008 6:00:42 PM

Number: 11 Author: LSI-Penokie Subject: Highlight Date: 8/19/2008 5:06:55 PM -07'00'
Should be << translation of the SECURITY PROTOCOL field is unspecified >>

Comments from page 64 continued on next page

8.9.1.3 ALLOCATION LENGTH field

8.9.1.3.1 ALLOCATION LENGTH field translation overview

The translation of ALLOCATION LENGTH varies based on the value of SECURITY PROTOCOL. If allocation length is zero, the SATL shall use the ATA TRUSTED NON-DATA command with bit 24 of the LBA field set to one, instead of TRUSTED RECEIVE or TRUSTED RECEIVE DMA.

8.9.1.3.2 SECURITY PROTOCOL 00h - 06h

If INC_512 is set to one:

a) If ALLOCATION LENGTH is greater than FFFFh, then the SATL shall return CHECK CONDITION status with the sense key set to ILLEGAL REQUEST and the additional sense code set to INVALID FIELD IN CDB;
b) Otherwise, the ATA Transfer_Length field shall be set to ALLOCATION LENGTH (15:0). After completion of the ATA TRUSTED RECEIVE or ATA TRUSTED RECEIVE DMA command, the data shall be transferred to the SCSI application client.

If INC_512 is set to zero:

a) If ALLOCATION LENGTH is greater than 1FF_FE00h, then the SATL shall return CHECK CONDITION status with the sense key set to ILLEGAL REQUEST and the additional sense code set to INVALID FIELD IN CDB;
b) otherwise, the ATA Transfer_Length field shall be translated from bytes to a number of padded 512-byte units from the result of the following calculation:

ATA Transfer_Length(15:0) = ((ALLOCATION LENGTH + 511) / 512)

After successful completion of the ATA TRUSTED RECEIVE or ATA TRUSTED RECEIVE DMA command, the data shall be transferred to the SCSI application client up to the specified ALLOCATION LENGTH number of bytes.

8.9.1.3.3 SECURITY PROTOCOL values 07h - FFh

12 The translation of this field is unspecified (see 3.4.2).

8.10 SECURITY PROTOCOL OUT command

8.10.1 SECURITY PROTOCOL OUT command overview

The SECURITY PROTOCOL OUT command provides a means for the application client to send security information to a SCSI target device. Table 23 shows the translation for fields specified in the SECURITY PROTOCOL OUT CDB.

13

Table 23 — SECURITY PROTOCOL OUT CDB field translation

Field	Description or Reference
17 OPERATION CODE	Set to A2h. 15 16 The SATL shall send the ATA TRUSTED RECEIVE command or the ATA TRUSTED RECEIVE DMA command to the ATA device. 18
SECURITY PROTOCOL	8.9.1.1 19
SECURITY PROTOCOL SPECIFIC	8.9.1.2
INC_512	8.9.1.3
TRANSFER LENGTH	8.9.1.3
CONTROL	6.5

Status
moverby Accepted 11/3/2008 6:01:20 PM

Number: 12 Author: ENDL Texas Subject: Note Date: 9/2/2008 8:16:37 AM -07'00'

The content of this subclause makes no mention of allocation length. Therefore, the subclause cannot appropriately be identified as a subclause of the allocation length field translation.

Status
moverby Accepted 11/3/2008 6:01:15 PM

Author: moverby Subject: Sticky Note Date: 11/3/2008 6:01:10 PM

Fixed with George Penokie comment.

Number: 13 Author: HPQ-RElliott Subject: Note Date: 9/3/2008 9:42:24 AM -07'00'

8.10.1 has "hanging paragraphs"

There should be no 8.10.1 if there is no 8.10.2.

If a section has subsections, it cannot have introductory text.

Status
moverby Accepted 11/3/2008 6:01:48 PM

Author: moverby Subject: Sticky Note Date: 11/3/2008 6:01:44 PM

Delete 8.10.1 and promote subclauses.

Number: 14 Author: HPQ-RElliott Subject: Highlight Date: 9/3/2008 9:42:24 AM -07'00'

A2h
s/b
B5h

Status
moverby Accepted 11/3/2008 6:02:12 PM

Number: 15 Author: STX-Hatfield Subject: Highlight Date: 8/12/2008 1:17:49 PM -07'00'

A2h
s/b
B5h

Status
moverby Accepted 11/3/2008 6:02:09 PM

Number: 16 Author: Kevin_Marks Subject: Highlight Date: 8/15/2008 12:59:44 PM -07'00'

"The SATL shall send the ATA TRUSTED RECEIVE command or the ATA TRUSTED RECEIVE DMA command to the ATA device."
s/b
"The SATL shall send the ATA TRUSTED SEND command or the ATA TRUSTED SEND DMA command to the ATA device."

Status
moverby Accepted 11/3/2008 6:02:16 PM

Number: 17 Author: Kevin_Marks Subject: Highlight Date: 8/15/2008 12:58:06 PM -07'00'

OPERATION CODE -->

Wondering if we need a table note that says if transfer length = 0, then use ATA TRUSTED NON-DATA command as stated in transfer length section.

Status
moverby Accepted 11/3/2008 6:02:37 PM

Author: moverby Subject: Sticky Note Date: 11/3/2008 6:02:35 PM

Yes. Use same language as is used in SECURITY PROTOCOL IN

Number: 18 Author: HPQ-RElliott Subject: Note Date: 9/3/2008 9:42:24 AM -07'00'

Description needs to include TRUSTED NON-DATA too

Status
moverby Accepted 11/3/2008 6:03:08 PM

Author: moverby Subject: Sticky Note Date: 11/3/2008 6:03:05 PM

Fixed with Kevin Marks comment to match changes to SECURITY PROTOCOL IN

Number: 19 Author: HPQ-RElliott Subject: Note Date: 9/3/2008 9:42:24 AM -07'00'

All the 8.9.1.x references in table 23 should be to 8.10.1.x

Status
moverby Accepted 11/3/2008 6:03:14 PM

8.10.1.1 SECURITY PROTOCOL field

The SECURITY PROTOCOL field shall be copied to the ATA Security_Protocol field.

8.10.1.2 SECURITY PROTOCOL SPECIFIC field

The SECURITY PROTOCOL SPECIFIC field shall be copied to the ATA SP_Specific field.

8.10.1.3 TRANSFER LENGTH field

8.10.1.3.1 SECURITY PROTOCOL field translation overview

The translation of TRANSFER LENGTH varies based on the value of SECURITY PROTOCOL. If transfer length is zero, the SATL shall use the ATA TRUSTED NON-DATA command with bit 24 of the LBA field set to zero, instead of TRUSTED SEND or TRUSTED SEND DMA.

8.10.1.3.2 SECURITY PROTOCOL values 00h - 06h

If the INC_512 is set to one:

a) If TRANSFER LENGTH is greater than FFFFh, then the SATL shall return CHECK CONDITION status with the sense key set to ILLEGAL REQUEST and the additional sense code set to INVALID FIELD IN CDB;
b) Otherwise, the ATA Transfer_Length field shall be set to ALLOCATION LENGTH (15:0). The ATA TRUSTED SEND or ATA TRUSTED SEND DMA command shall transfer the data.

If the INC_512 bit is set to zero:

a) If TRANSFER LENGTH is greater than 1FF_FE00h, then the SATL shall return CHECK CONDITION status with the sense key set to ILLEGAL REQUEST and the additional sense code set to INVALID FIELD IN CDB;
b) Otherwise, the ATA Transfer_Length field shall be translated from bytes to a number of padded 512-byte units from the result of the following calculation:

ATA Transfer_Length(15:0) = ((TRANSFER LENGTH + 511) / 512)

The final data block may be padded (see SPC-4). The ATA TRUSTED SEND or ATA TRUSTED SEND DMA command shall transfer the padded data for ATA Transfer_Length number of data blocks.

8.10.1.3.3 SECURITY PROTOCOL values 07h - FFh

The translation of this field is unspecified (see 3.4.2).

Number: 1 Author: HPQ-RElliott Subject: Highlight Date: 9/3/2008 9:42:24 AM -07'00'
Security_Protocol

ata8-acs-r6 doesn't use _

Status
moverby Accepted 11/3/2008 11:19:52 PM

Number: 2 Author: HPQ-RElliott Subject: Highlight Date: 9/3/2008 9:42:24 AM -07'00'
SP_Specific

ata8-acs-r6 doesn't use _

Status
moverby Accepted 11/3/2008 11:19:57 PM

Number: 3 Author: ENDL Texas Subject: Note Date: 9/2/2008 8:22:05 AM -07'00'
It is not clear that the translation of the transfer length field should be differentiated based on the contents of the security protocol field. The translation specified for security protocol codes 00h to 06h appears to be globally applicable.

Status
moverby Accepted 11/4/2008 10:38:01 AM
Author: moverby Subject: Sticky Note Date: 11/4/2008 10:37:59 AM
Collapse this into a general translation.

Number: 4 Author: ENDL Texas Subject: Highlight Date: 9/2/2008 8:19:26 AM -07'00'
SECURITY PROTOCOL field translation overview s/b TRANSFER LENGTH field translation overview

Status
moverby Accepted 11/3/2008 11:20:12 PM

Number: 5 Author: HPQ-RElliott Subject: Highlight Date: 9/3/2008 9:42:24 AM -07'00'
SECURITY PROTOCOL field
s/b
TRANSFER LENGTH field

Status
moverby Accepted 11/3/2008 11:20:19 PM

Number: 6 Author: Kevin_Marks Subject: Highlight Date: 8/15/2008 1:05:37 PM -07'00'
If transfer length is zero
s/b
If TRANSFER LENGTH field is set to zero

Status
moverby Accepted 11/3/2008 11:21:33 PM

Number: 7 Author: Kevin_Marks Subject: Highlight Date: 8/15/2008 1:02:09 PM -07'00'
TRANSFER LENGTH varies
s/b
transfer length varies

Status
moverby Accepted 11/3/2008 11:21:22 PM

Number: 8 Author: Kevin_Marks Subject: Highlight Date: 8/15/2008 1:02:46 PM -07'00'
value of SECURITY PROTOCOL.
s/b
value contained in the SECURITY PROTOCOL field.

Status
moverby Rejected 11/3/2008 11:21:15 PM
Author: moverby Subject: Sticky Note Date: 11/3/2008 11:21:11 PM
Rejected in favor of just dropping to normal case

Number: 9 Author: HPQ-RElliott Subject: Highlight Date: 9/3/2008 9:42:24 AM -07'00'
SECURITY PROTOCOL
s/b
the SECURITY PROTOCOL field

Status
moverby Rejected 11/3/2008 11:21:05 PM
Author: moverby Subject: Sticky Note Date: 11/3/2008 11:20:56 PM
Rejected in favor of just dropping to normal case

Number: 10 Author: LSI-Penokie Subject: Highlight Date: 8/19/2008 5:07:52 PM -07'00'
SECURITY PROTOCOL should not be small caps here.

Status
moverby Accepted 11/3/2008 11:20:31 PM

Number: 11 Author: HPQ-RElliott Subject: Highlight Date: 9/3/2008 9:42:24 AM -07'00'
transfer length is zero
s/b
the TRANSFER LENGTH field is set to 00000000h, then

Status
moverby Accepted 11/3/2008 11:20:26 PM

Number: 12 Author: HPQ-RElliott Subject: Highlight Date: 9/3/2008 9:42:24 AM -07'00'
TRANSFER LENGTH
s/b

Comments from page 65 continued on next page

8.10.1.1 SECURITY PROTOCOL field

The SECURITY PROTOCOL field shall be copied to the ATA Security_Protocol field.

8.10.1.2 SECURITY PROTOCOL SPECIFIC field

The SECURITY PROTOCOL SPECIFIC field shall be copied to the ATA SP_Specific field.

8.10.1.3 TRANSFER LENGTH field

8.10.1.3.1 SECURITY PROTOCOL field translation overview

The translation of TRANSFER LENGTH varies based on the value of SECURITY PROTOCOL. If transfer length is zero, the SATL shall use the ATA TRUSTED NON-DATA command with bit 24 of the LBA field set to zero, instead of TRUSTED SEND or TRUSTED SEND DMA.

8.10.1.3.2 SECURITY PROTOCOL values 00h - 06h

If the INC_512 is set to one:

a) If TRANSFER LENGTH is greater than FFFFh, then the SATL shall return CHECK CONDITION status with the sense key set to ILLEGAL REQUEST and the additional sense code set to INVALID FIELD IN CDB;
b) Otherwise, the ATA Transfer_Length field shall be set to ALLOCATION LENGTH (15:0). The ATA TRUSTED SEND or ATA TRUSTED SEND DMA command shall transfer the data.

If the INC_512 bit is set to zero:

a) If TRANSFER LENGTH is greater than 1FF_FE00h, then the SATL shall return CHECK CONDITION status with the sense key set to ILLEGAL REQUEST and the additional sense code set to INVALID FIELD IN CDB;
b) Otherwise, the ATA Transfer_Length field shall be translated from bytes to a number of padded 512-byte units from the result of the following calculation:

ATA Transfer_Length(15:0) = ((TRANSFER LENGTH + 511) / 512)

The final data block may be padded (see SPC-4). The ATA TRUSTED SEND or ATA TRUSTED SEND DMA command shall transfer the padded data for ATA Transfer_Length number of data blocks.

8.10.1.3.3 SECURITY PROTOCOL values 07h - FFh

The translation of this field is unspecified (see 3.4.2).

the TRANSFER LENGTH field

Status
moverby Rejected 11/3/2008 11:21:48 PM
Author: moverby Subject: Sticky Note Date: 11/3/2008 11:21:44 PM
Rejected in favor of just dropping to normal case

Number: 13 Author: LSI-Penokie Subject: Highlight Date: 8/19/2008 5:07:46 PM -07'00'
TRANSFER LENGTH should not be small caps here.

Status
moverby Accepted 11/3/2008 11:21:38 PM
Number: 14 Author: Kevin_Marks Subject: Highlight Date: 8/15/2008 1:06:15 PM -07'00'
instead of TRUSTED SEND or TRUSTED SEND DMA.
s/b
instead of the ATA TRUSTED SEND command or ATA TRUSTED SEND DMA command.

Status
moverby Accepted 11/3/2008 11:22:07 PM
Author: moverby Subject: Sticky Note Date: 11/3/2008 11:22:04 PM
just add command at the end of the list.

Number: 15 Author: Kevin_Marks Subject: Highlight Date: 8/15/2008 1:13:42 PM -07'00'
8.10.1.3.2 SECURITY PROTOCOL values 00h - 06h

I'm not sure that Protocol ID 01h-06h belong in this spec as they belong to TCG.

Status
moverby Accepted 9/9/2008 1:28:06 PM -07'00'
Author: moverby Subject: Sticky Note Date: 9/9/2008 1:07:37 PM -07'00'
Change to just 00h and mimic for the SECURITY PROTOCOL IN

Status
moverby None 9/9/2008 1:28:10 PM -07'00'
Number: 16 Author: LSI-Penokie Subject: Highlight Date: 8/19/2008 5:08:13 PM -07'00'
SECURITY PROTOCOL should not be small caps here.

Status
moverby Accepted 11/3/2008 11:22:11 PM
Number: 17 Author: HPQ-RElliott Subject: Highlight Date: 9/3/2008 9:42:24 AM -07'00'
the INC_512 is set
s/b
the INC_512 bit is set

Status
moverby Accepted 11/3/2008 11:22:36 PM
Number: 18 Author: LSI-Penokie Subject: Highlight Date: 8/19/2008 5:09:38 PM -07'00'
Should be << If the INC_512 bit is set to one: >>

Status
moverby Accepted 11/3/2008 11:22:31 PM
Number: 19 Author: Kevin_Marks Subject: Highlight Date: 8/15/2008 1:06:38 PM -07'00'
INC_512
s/b
INC_512 bit

Status
moverby Accepted 11/3/2008 11:22:27 PM
Number: 20 Author: Kevin_Marks Subject: Highlight Date: 8/15/2008 1:08:34 PM -07'00'
TRANSFER LENGTH is greater than FFFFh,
s/b
the TRANSFER LENGTH field contains a value greater than FFFFh,

Status
moverby Rejected 11/3/2008 11:23:07 PM
Author: moverby Subject: Sticky Note Date: 11/3/2008 11:23:03 PM
Rejected in favor of Rob Elliott comment to make this 0000FFFFh.

Number: 21 Author: HPQ-RElliott Subject: Highlight Date: 9/3/2008 9:42:24 AM -07'00'
FFFFh
s/b
0000FFFFh

to make it clearer how wide the field is and why it could exceed all Fs

Status
moverby Accepted 11/3/2008 11:22:45 PM
Number: 22 Author: HPQ-RElliott Subject: Highlight Date: 9/3/2008 9:42:24 AM -07'00'
TRANSFER LENGTH
s/b
the TRANSFER LENGTH field

Status
moverby Rejected 11/3/2008 11:23:43 PM
Author: moverby Subject: Sticky Note Date: 11/3/2008 11:23:39 PM
Rejected in favor of just dropping to normal case

Comments from page 65 continued on next page

8.10.1.1 SECURITY PROTOCOL field

The SECURITY PROTOCOL field shall be copied to the ATA Security_Protocol field.

8.10.1.2 SECURITY PROTOCOL SPECIFIC field

The SECURITY PROTOCOL SPECIFIC field shall be copied to the ATA SP_Specific field.

8.10.1.3 TRANSFER LENGTH field

8.10.1.3.1 SECURITY PROTOCOL field translation overview

The translation of TRANSFER LENGTH varies based on the value of SECURITY PROTOCOL. If transfer length is zero, the SATL shall use the ATA TRUSTED NON-DATA command with bit 24 of the LBA field set to zero, instead of TRUSTED SEND or TRUSTED SEND DMA.

8.10.1.3.2 SECURITY PROTOCOL values 00h - 06h

If the INC_512 is set to one:

a) If TRANSFER LENGTH is greater than FFFFh, then the SATL shall return CHECK CONDITION status with the sense key set to ILLEGAL REQUEST and the additional sense code set to INVALID FIELD IN CDB;
b) Otherwise, the ATA Transfer_Length field shall be set to ALLOCATION LENGTH (15:0). The ATA TRUSTED SEND or ATA TRUSTED SEND DMA command shall transfer the data.

If the INC_512 bit is set to zero:

a) If TRANSFER LENGTH is greater than 1FF_FE00h, then the SATL shall return CHECK CONDITION status with the sense key set to ILLEGAL REQUEST and the additional sense code set to INVALID FIELD IN CDB;
b) Otherwise, the ATA Transfer_Length field shall be translated from bytes to a number of padded 512-byte units from the result of the following calculation:

ATA Transfer_Length(15:0) = ((TRANSFER LENGTH + 511) / 512)

The final data block may be padded (see SPC-4). The ATA TRUSTED SEND or ATA TRUSTED SEND DMA command shall transfer the padded data for ATA Transfer_Length number of data blocks.

8.10.1.3.3 SECURITY PROTOCOL values 07h - FFh

The translation of this field is unspecified (see 3.4.2).

Number: 23 Author: LSI-Penokie Subject: Highlight Date: 8/19/2008 5:08:19 PM -07'00'

TRANSFER LENGTH should not be small caps here.

Status
moverby Accepted 11/3/2008 11:23:33 PM

Number: 24 Author: Kevin_Marks Subject: Sticky Note Date: 8/15/2008 1:14:02 PM -07'00'

a), b) without and or or?

Status
moverby Accepted 11/4/2008 10:30:32 AM

8.9.1.3 ALLOCATION LENGTH field

8.9.1.3.1 ALLOCATION LENGTH field translation overview

The translation of ALLOCATION LENGTH varies based on the value of SECURITY PROTOCOL. If allocation length is zero, the SATL shall use the ATA TRUSTED NON-DATA command with bit 24 of the LBA field set to one, instead of TRUSTED RECEIVE or TRUSTED RECEIVE DMA.

8.9.1.3.2 SECURITY PROTOCOL 00h - 06h

If INC_512 is set to one:

a) If ALLOCATION LENGTH is greater than FFFFh, then the SATL shall return CHECK CONDITION status with the sense key set to ILLEGAL REQUEST and the additional sense code set to INVALID FIELD IN CDB;
b) Otherwise, the ATA Transfer_Length field shall be set to ALLOCATION LENGTH (15:0). After completion of the ATA TRUSTED RECEIVE or ATA TRUSTED RECEIVE DMA command, the data shall be transferred to the SCSI application client.

If INC_512 is set to zero:

a) If ALLOCATION LENGTH is greater than 1FF_FE00h, then the SATL shall return CHECK CONDITION status with the sense key set to ILLEGAL REQUEST and the additional sense code set to INVALID FIELD IN CDB;
b) otherwise, the ATA Transfer_Length field shall be translated from bytes to a number of padded 512-byte units from the result of the following calculation:

ATA Transfer_Length(15:0) = ((ALLOCATION LENGTH + 511) / 512)

After successful completion of the ATA TRUSTED RECEIVE or ATA TRUSTED RECEIVE DMA command, the data shall be transferred to the SCSI application client up to the specified ALLOCATION LENGTH number of bytes.

8.9.1.3.3 SECURITY PROTOCOL values 07h - FFh

The translation of this field is unspecified (see 3.4.2).

8.10 SECURITY PROTOCOL OUT command

8.10.1 SECURITY PROTOCOL OUT command overview

The SECURITY PROTOCOL OUT command provides a means for the application client to send security information to a SCSI target device. Table 23 shows the translation for fields specified in the SECURITY PROTOCOL OUT CDB.

Table 23 — SECURITY PROTOCOL OUT CDB field translation

Field	Description or Reference
OPERATION CODE	Set to A2h. The SATL shall send the ATA TRUSTED RECEIVE command or the ATA TRUSTED RECEIVE DMA command to the ATA device.
SECURITY PROTOCOL	8.9.1.1
SECURITY PROTOCOL SPECIFIC	8.9.1.2
INC_512	8.9.1.3
TRANSFER LENGTH	8.9.1.3
CONTROL	6.5

Author: moverby Subject: Sticky Note Date: 11/3/2008 5:57:49 PM

Suggest collapsing into paragraph without a) b) list.

8.10.1.1 SECURITY PROTOCOL field

The SECURITY PROTOCOL field shall be copied to the ATA Security_Protocol field.

8.10.1.2 SECURITY PROTOCOL SPECIFIC field

The SECURITY PROTOCOL SPECIFIC field shall be copied to the ATA SP_Specific field.

8.10.1.3 TRANSFER LENGTH field

8.10.1.3.1 SECURITY PROTOCOL field translation overview

The translation of TRANSFER LENGTH varies based on the value of SECURITY PROTOCOL. If transfer length is zero, the SATL shall use the ATA TRUSTED NON-DATA command with bit 24 of the LBA field set to zero, instead of TRUSTED SEND or TRUSTED SEND DMA.

8.10.1.3.2 SECURITY PROTOCOL values 00h - 06h

If the INC_512 is set to one:

a) If TRANSFER LENGTH is greater than FFFFh, then the SATL shall return CHECK CONDITION status with the sense key set to ILLEGAL REQUEST and the additional sense code set to INVALID FIELD IN CDB;
b) Otherwise, the ATA Transfer_Length field shall be set to ALLOCATION LENGTH (15:0). The ATA TRUSTED SEND or ATA TRUSTED SEND DMA command shall transfer the data.

If the INC_512 bit is set to zero:

a) If TRANSFER LENGTH is greater than FF_FE00h, then the SATL shall return CHECK CONDITION status with the sense key set to ILLEGAL REQUEST and the additional sense code set to INVALID FIELD IN CDB;
b) Otherwise, the ATA Transfer_Length field shall be translated from bytes to a number of padded 512-byte units from the result of the following calculation:

ATA Transfer_Length(15:0) = ((TRANSFER LENGTH + 511) / 512)

The final data block may be padded (see SPC-4). The ATA TRUSTED SEND or ATA TRUSTED SEND DMA command shall transfer the padded data for ATA Transfer_Length number of data blocks.

8.10.1.3.3 SECURITY PROTOCOL values 07h - FFh

The translation of this field is unspecified (see 3.4.2).

Author: moverby Subject: Sticky Note Date: 11/4/2008 10:30:28 AM
Collapse into paragraph

Number: 1 Author: Kevin_Marks Subject: Highlight Date: 8/15/2008 1:10:15 PM -07'00'
The ATA TRUSTED SEND or ATA TRUSTED SEND DMA command shall transfer the data.
s/b
The ATA TRUSTED SEND command or ATA TRUSTED SEND DMA command shall be used to transfer the data.

Status
moverby Accepted 11/3/2008 11:24:15 PM

Number: 2 Author: Kevin_Marks Subject: Highlight Date: 8/15/2008 1:11:56 PM -07'00'
set to ALLOCATION LENGTH (15:0).
s/b
set to the contents of bits (15:0) of the TRANSFER LENGTH field.

Status
moverby Accepted 11/3/2008 11:24:06 PM

Number: 3 Author: HPQ-RElliott Subject: Highlight Date: 9/3/2008 9:42:24 AM -07'00'
ALLOCATION LENGTH (15:0)
s/b
the value of the ALLOCATION LENGTH field.

Status
moverby Accepted 11/3/2008 11:23:57 PM

Number: 4 Author: LSI-Penokie Subject: Highlight Date: 8/19/2008 5:08:31 PM -07'00'
ALLOCATION LENGTH should not be small caps here.

Status
moverby Accepted 11/3/2008 11:24:19 PM

Number: 5 Author: LSI-Penokie Subject: Highlight Date: 8/19/2008 5:10:14 PM -07'00'
Should be << If the INC_512 bit is set to zero: >>

Status
moverby Accepted 11/3/2008 11:24:29 PM

Number: 6 Author: Kevin_Marks Subject: Highlight Date: 8/15/2008 1:12:46 PM -07'00'
TRANSFER LENGTH is greater than 1FF_FE00h,
s/b
the TRANSFER LENGTH field contains a value greater than 1FF_FE00h,

Status
moverby Accepted 11/3/2008 11:24:39 PM

Number: 7 Author: HPQ-RElliott Subject: Highlight Date: 9/3/2008 9:42:24 AM -07'00'
1FF_FE00h
s/b
01FF_FE00h (i.e., FFFFh x 512)

to make it clear how wide the field is

Status
moverby Accepted 11/3/2008 11:24:35 PM

Number: 8 Author: HPQ-RElliott Subject: Highlight Date: 9/3/2008 9:42:24 AM -07'00'
TRANSFER LENGTH
s/b
the TRANSFER LENGTH field

Status
moverby Rejected 11/3/2008 11:24:59 PM
Author: moverby Subject: Sticky Note Date: 11/3/2008 11:24:54 PM
Rejected in favor of just dropping to normal case

Number: 9 Author: LSI-Penokie Subject: Highlight Date: 8/19/2008 5:08:40 PM -07'00'
TRANSFER LENGTH should not be small caps here.

Status
moverby Accepted 11/3/2008 11:24:44 PM

Number: 10 Author: Kevin_Marks Subject: Sticky Note Date: 8/15/2008 1:14:08 PM -07'00'
a), b) without and or or?

Status
moverby Accepted 11/4/2008 10:30:53 AM
Author: moverby Subject: Sticky Note Date: 11/4/2008 10:30:49 AM
Collapse into paragraph

Number: 11 Author: HPQ-RElliott Subject: Highlight Date: 9/3/2008 9:42:24 AM -07'00'
Transfer_Length

ata8-acs-r6 doesn't use _

Status
moverby Accepted 11/3/2008 11:25:28 PM

Number: 12 Author: HPQ-RElliott Subject: Highlight Date: 9/3/2008 9:42:24 AM -07'00'
bytes
s/b
a number of bytes

Status
moverby Accepted 11/3/2008 11:25:24 PM

Comments from page 65 continued on next page

8.10.1.1 SECURITY PROTOCOL field

The SECURITY PROTOCOL field shall be copied to the ATA Security_Protocol field.

8.10.1.2 SECURITY PROTOCOL SPECIFIC field

The SECURITY PROTOCOL SPECIFIC field shall be copied to the ATA SP_Specific field.

8.10.1.3 TRANSFER LENGTH field

8.10.1.3.1 SECURITY PROTOCOL field translation overview

The translation of TRANSFER LENGTH varies based on the value of SECURITY PROTOCOL. If transfer length is zero, the SATL shall use the ATA TRUSTED NON-DATA command with bit 24 of the LBA field set to zero, instead of TRUSTED SEND or TRUSTED SEND DMA.

8.10.1.3.2 SECURITY PROTOCOL values 00h - 06h

If the INC_512 is set to one:

a) If TRANSFER LENGTH is greater than FFFFh, then the SATL shall return CHECK CONDITION status with the sense key set to ILLEGAL REQUEST and the additional sense code set to INVALID FIELD IN CDB;
b) Otherwise, the ATA Transfer_Length field shall be set to ALLOCATION LENGTH (15:0). The ATA TRUSTED SEND or ATA TRUSTED SEND DMA command shall transfer the data.

If the INC_512 bit is set to zero:

a) If TRANSFER LENGTH is greater than 1FF_FE00h, then the SATL shall return CHECK CONDITION status with the sense key set to ILLEGAL REQUEST and the additional sense code set to INVALID FIELD IN CDB;
b) Otherwise, the ATA Transfer_Length field shall be translated from bytes to a number of padded 512-byte units from the result of the following calculation:

ATA Transfer_Length(15:0) = ((TRANSFER LENGTH + 511) / 512)

The final data block may be padded (see SPC-4). The ATA TRUSTED SEND or ATA TRUSTED SEND DMA command shall transfer the padded data for ATA Transfer_Length number of data blocks.

8.10.1.3.3 SECURITY PROTOCOL values 07h - FFh

The translation of this field is unspecified (see 3.4.2).

Number: 13 Author: HPQ-RElliott Subject: Highlight Date: 9/3/2008 9:42:24 AM -07'00'

Transfer_Length

ata8-acs-r6 doesn't use _

Status
moverby Accepted 11/3/2008 11:25:32 PM

Number: 14 Author: HPQ-RElliott Subject: Highlight Date: 9/3/2008 9:42:24 AM -07'00'

TRANSFER LENGTH
s/b
lowercase

Status
moverby Accepted 11/3/2008 11:28:43 PM

Number: 15 Author: Kevin_Marks Subject: Highlight Date: 8/15/2008 1:14:35 PM -07'00'

TRANSFER LENGTH
s/b
TRANSFER LENGTH field

Status
moverby Rejected 11/3/2008 11:25:49 PM

Author: moverby Subject: Sticky Note Date: 11/3/2008 11:25:45 PM

Rejected in favor of just dropping to normal case

Number: 16 Author: LSI-Penokie Subject: Highlight Date: 8/19/2008 5:08:51 PM -07'00'

TRANSFER LENGTH should not be small caps here.

Status
moverby Accepted 11/3/2008 11:25:38 PM

Number: 17 Author: Kevin_Marks Subject: Highlight Date: 8/15/2008 1:14:58 PM -07'00'

ATA TRUSTED SEND or
s/b
ATA TRUSTED SEND command or

Status
moverby Rejected 11/3/2008 11:25:58 PM

Number: 18 Author: HPQ-RElliott Subject: Highlight Date: 9/3/2008 9:42:24 AM -07'00'

for...
s/b
for the number of blocks specified by the ATA Trans_Length field

Status
moverby Accepted 11/3/2008 11:26:21 PM

Number: 19 Author: Kevin_Marks Subject: Highlight Date: 8/15/2008 1:15:47 PM -07'00'

07h - FFh
s/b
01h - FFh

based on assumption that 01h-06h should not be defined above.

Status
moverby Accepted 11/3/2008 11:26:31 PM

Number: 20 Author: LSI-Penokie Subject: Highlight Date: 8/19/2008 5:09:02 PM -07'00'

SECURITY PROTOCOL should not be small caps here.

Status
moverby Accepted 11/3/2008 11:27:09 PM

Number: 21 Author: LSI-Penokie Subject: Highlight Date: 8/19/2008 5:21:21 PM -07'00'

Should be << translation of the SECURITY PROTOCOL field is unspecified >>

Status
moverby Rejected 11/3/2008 11:27:37 PM

Author: moverby Subject: Sticky Note Date: 11/3/2008 11:27:29 PM

Rejected in favor of Kevin Marks comments

Number: 22 Author: HPQ-RElliott Subject: Highlight Date: 9/3/2008 9:42:24 AM -07'00'

"this field" is overstated

Applies only for these values in this field

Status
moverby Accepted 11/3/2008 11:27:05 PM

Author: moverby Subject: Sticky Note Date: 11/3/2008 11:27:02 PM

...translation of this field with values 07h to FFh is ...

Number: 23 Author: ENDL Texas Subject: Note Date: 9/2/2008 8:18:39 AM -07'00'

The content of this subclause makes no mention of transfer length. Therefore, the subclause cannot appropriately be identified as a subclause of the allocation length field translation.

Status
moverby Rejected 11/4/2008 10:38:43 AM

Author: moverby Subject: Sticky Note Date: 11/3/2008 11:28:38 PM

It is saying that the translation of transfer length for protocols 07h - FFh is unspecified.

Author: moverby Subject: Sticky Note Date: 11/4/2008 10:38:40 AM

This clause will be removed as part of accepting moving the transfer length translation into a general translation.

8.11 SEND DIAGNOSTIC command

8.11.1 SEND DIAGNOSTIC command overview

The SEND DIAGNOSTIC command provides a mechanism for an application client to request diagnostic operations to be performed on the target device, logical unit, or both. The SATL shall implement the default self-test feature (see SPC-3). Table 24 shows the translation for fields specified in the SEND DIAGNOSTIC CDB.

Table 24 — SEND DIAGNOSTIC CDB field translations

Field	Description or reference
OPERATION CODE	Set to 1Dh. See 8.11.2.
SELF-TEST CODE	8.11.2 and 8.11.3.
PF	Unspecified (see 3.4.2)
SELFTEST	8.11.3
DEVOFFL	If the DEVOFFL bit is set to zero, then the SATL shall process the command as specified in SPC-3. If the DEVOFFL bit is set to one, then the SATL shall terminate the command with CHECK CONDITION status with the sense key set to ILLEGAL REQUEST and the additional sense code set to INVALID FIELD IN CDB.
UNITOFFL	If the UNITOFFL bit is set to zero, then the SATL shall process the command as specified in SPC-3. If the UNITOFFL bit is set to one, then the SATL shall terminate the command with CHECK CONDITION status with the sense key set to ILLEGAL REQUEST and the additional sense code set to INVALID FIELD IN CDB.
PARAMETER LIST LENGTH	If the PARAMETER LIST LENGTH field is set to zero, then the SATL shall process the command as specified in SPC-3. If the PARAMETER LIST LENGTH field is not set to zero, then the SATL shall terminate the command with a CHECK CONDITION status with sense key set to ILLEGAL REQUEST and additional sense code set to INVALID FIELD IN CDB.
CONTROL	6.5

Page: 66

Number: 1 Author: Kevin_Marks Subject: Highlight Date: 8/15/2008 1:16:16 PM -07'00'

(see SPC-3).
s/b
(see SPC-4).

Status
moverby Accepted 11/3/2008 6:03:28 PM

Number: 2 Author: Kevin_Marks Subject: Highlight Date: 8/15/2008 1:16:41 PM -07'00'

SPC-3.
s/b
SPC-4.

Status
moverby Accepted 11/3/2008 6:03:31 PM

Number: 3 Author: Kevin_Marks Subject: Highlight Date: 8/15/2008 1:17:00 PM -07'00'

SPC-3.
s/b
SPC-4.

Status
moverby Accepted 11/3/2008 6:03:35 PM

Number: 4 Author: Kevin_Marks Subject: Highlight Date: 8/15/2008 1:17:08 PM -07'00'

SPC-3.
s/b
SPC-4.

Status
moverby Accepted 11/3/2008 6:03:38 PM

8.11.2 SELF-TEST CODE field

The SATL shall determine if the value in the SELF-TEST CODE field is valid depending on the value of the SELFTEST bit and what is reported by the ATA device with respect to the ATA SMART EXECUTE OFF-LINE IMMEDIATE command (see 8.11.3).

If the value of the SELF-TEST CODE field is valid, then the SATL shall process the command as described in table 25.

Table 25 — SELF-TEST CODE field translation (part 1 of 2)

Code	Name of test	Description of test
000b	Default self-test	Used when the SELFTEST bit is set to one.
001b	Background short self-test	The SATL shall perform the following: 1) return status for the SEND DIAGNOSTIC command as soon as the CDB has been validated and initialize the Self-Test Results log page (see 10.2.4 and SPC-3); and 2) send an ATA SMART EXECUTE OFF-LINE IMMEDIATE command with the LBA Low register set to 1 (i.e., Execute SMART Short self-test routine immediately in off-line mode) to the ATA device.
010b	Background extended self-test	The SATL shall perform the following: 1) return status for the SEND DIAGNOSTIC command as soon as the CDB has been validated and initialize the Self-Test Results log page (see 10.2.4 and SPC-3); and 2) send an ATA SMART EXECUTE OFF-LINE IMMEDIATE command with the LBA Low register set to 2 (i.e., Execute SMART Extended self-test routine immediately in off-line mode) to the ATA device.
011b	Reserved	
100b	Abort background self-test	If a previous SEND DIAGNOSTIC command specified a background self-test function and that self-test has not completed (see SPC-3), then the SATL shall send an ATA SMART EXECUTE OFF-LINE IMMEDIATE command with the LBA Low register set to 127 (i.e., Abort off-line mode self-test routine) to the ATA device. If the ATA SMART EXECUTE OFF-LINE IMMEDIATE command completes without error, the SATL shall return GOOD status. If the ATA command completes with an error the SATL shall respond as defined in SPC-3.
101b	Foreground short self-test	The SATL shall send an ATA SMART EXECUTE OFF-LINE IMMEDIATE command with the LBA Low register set to 129 (i.e., Execute SMART Short self-test routine immediately in captive mode) to the ATA device. If the ATA SMART EXECUTE OFF-LINE IMMEDIATE command completes without error, the SATL shall update the Self-Test Results log page prior to returning GOOD status. If the ATA command completes with an error the SATL shall first update the Self-Test Results log page (i.e., if supported, see SPC-3), and terminate the command with CHECK CONDITION status with the sense key set to HARDWARE ERROR and the additional sense code set to LOGICAL UNIT FAILED SELF-TEST.

Page: 67

Number: 1 Author: ENDL Texas Subject: Highlight Date: 9/2/2008 8:29:10 AM -07'00'

p 1, s 1
what is reported s/b the information that is reported

Status
moverby Accepted 11/3/2008 6:03:52 PM

Number: 2 Author: Kevin_Marks Subject: Highlight Date: 8/15/2008 1:18:21 PM -07'00'

SPC-3
s/b
SPC-4

Status
moverby Accepted 11/3/2008 6:03:55 PM

Number: 3 Author: Kevin_Marks Subject: Highlight Date: 8/15/2008 1:18:40 PM -07'00'

LBA Low register
s/b
ATA LBA Low register

Status
moverby Accepted 11/3/2008 6:04:00 PM

Number: 4 Author: Kevin_Marks Subject: Highlight Date: 8/15/2008 1:19:13 PM -07'00'

SPC-3
s/b
SPC-4

Status
moverby Accepted 11/3/2008 6:04:03 PM

Number: 5 Author: Kevin_Marks Subject: Highlight Date: 8/15/2008 1:18:59 PM -07'00'

LBA Low register
s/b
ATA LBA Low register

Status
moverby Accepted 11/3/2008 6:04:09 PM

Number: 6 Author: Kevin_Marks Subject: Highlight Date: 8/15/2008 1:19:46 PM -07'00'

LBA Low register
s/b
ATA LBA Low register

Status
moverby Accepted 11/3/2008 6:04:13 PM

Number: 7 Author: Kevin_Marks Subject: Highlight Date: 8/15/2008 1:21:12 PM -07'00'

error, the
s/b
error, then the

Status
moverby Accepted 11/3/2008 6:04:17 PM

Number: 8 Author: Kevin_Marks Subject: Highlight Date: 8/15/2008 1:21:30 PM -07'00'

error the
s/b
error, then the

Status
moverby Accepted 11/3/2008 6:04:21 PM

Number: 9 Author: Kevin_Marks Subject: Highlight Date: 8/15/2008 1:20:15 PM -07'00'

SPC-3.
s/b
SPC-4.

Status
moverby Accepted 11/3/2008 6:04:24 PM

Number: 10 Author: Kevin_Marks Subject: Highlight Date: 8/15/2008 1:19:54 PM -07'00'

LBA Low register
s/b
ATA LBA Low register

Status
moverby Accepted 11/3/2008 6:04:28 PM

Number: 11 Author: Kevin_Marks Subject: Highlight Date: 8/15/2008 1:20:57 PM -07'00'

error the
s/b
error, then the

Status
moverby Accepted 11/3/2008 6:04:31 PM

Number: 12 Author: Kevin_Marks Subject: Highlight Date: 8/15/2008 1:21:56 PM -07'00'

SPC-3),
s/b
SPC-4),

Status
moverby Accepted 11/3/2008 6:04:35 PM

Table 25 — SELF-TEST CODE field translation (part 2 of 2)

Code	Name of test	Description of test
110b	Foreground extended self-test	The SATL shall send an ATA SMART EXECUTE OFF-LINE IMMEDIATE command with the LBA Low register set to 130 (i.e., Execute SMART Extended self-test routine immediately in captive mode) to the ATA device. If the ATA SMART EXECUTE OFF-LINE IMMEDIATE command completes without error, the SATL shall update the Self-Test Results log page prior to returning GOOD status. If the ATA command completes with an error, the SATL shall first update the Self-Test Results log page (i.e., if supported, see SPC-3), and then terminate the command with CHECK CONDITION status with the sense key set to HARDWARE ERROR and additional sense code set to LOGICAL UNIT FAILED SELF-TEST.
111b	Reserved	

8.11.3 SELFTEST bit

The SATL shall translate the SELFTEST bit according to whether or not the ATA device supports and has enabled the ATA SMART EXECUTE OFF-LINE IMMEDIATE command as shown in table 26.

Page: 68

Number: 1 Author: Kevin_Marks Subject: Highlight Date: 8/15/2008 1:22:22 PM -07'00'

LBA Low register
s/b
ATA LBA Low register

Status
moverby Accepted 11/3/2008 6:04:43 PM

Number: 2 Author: Kevin_Marks Subject: Highlight Date: 8/15/2008 1:22:40 PM -07'00'

error, the
s/b
error, then the

Status
moverby Accepted 11/3/2008 6:04:49 PM

Number: 3 Author: Kevin_Marks Subject: Highlight Date: 8/15/2008 1:22:58 PM -07'00'

error, the
s/b
error, then the

Status
moverby Accepted 11/3/2008 6:04:52 PM

Number: 4 Author: Kevin_Marks Subject: Highlight Date: 8/15/2008 1:23:12 PM -07'00'

SPC-3)
s/b
SPC-4)

Status
moverby Accepted 11/3/2008 6:04:56 PM

Table 26 — SELFTEST bit

Code	ATA SMART EXECUTE OFF-LINE IMMEDIATE command[a]		SATL emulation
	supported	enabled	
0	no	n/a	The SATL shall terminate the SEND DIAGNOSTIC command with CHECK CONDITION status with the sense key set to ILLEGAL REQUEST and the additional sense code set to INVALID FIELD IN CDB.
	yes	no	The SATL shall terminate the SEND DIAGNOSTIC command with CHECK CONDITION status with the sense key set to ABORTED COMMAND and the additional sense code set to ATA DEVICE FEATURE NOT ENABLED.
		yes	The SELF-TEST CODE field is valid, and the SATL shall process the SEND DIAGNOSTIC command according to the value specified in the SELF-TEST CODE field as defined in 8.11.2.
1	no	n/a	The SATL shall send three ATA verify commands (see 3.1.24) to the ATA device with the Count field set to one and the LBA field set to: a) zero; b) the maximum user-addressable LBA; and c) an arbitrary number between zero and the maximum user-addressable LBA. If any of the three ATA verify commands ends with an error, then the SATL shall terminate the SEND DIAGNOSTIC command with a CHECK CONDITION status with the sense key set to HARDWARE ERROR and the additional sense code set to LOGICAL UNIT FAILED SELF-TEST. If all three ATA verify commands complete without error[b], then the SATL shall return GOOD status.
	yes	no	
	yes		The SATL shall send an ATA SMART EXECUTE OFF-LINE IMMEDIATE command with the LBA Low register set to 129 (i.e., Execute SMART Short self-test routine immediately in captive mode) to the ATA device. If the ATA EXECUTE OFF-LINE IMMEDIATE command completes without error, the SATL shall return GOOD status. If the ATA EXECUTE OFF-LINE IMMEDIATE command completes with an error, the SATL shall terminate the SEND DIAGNOSITC command with a CHECK CONDITION status with the sense key set to HARDWARE ERROR and the additional sense code set to LOGICAL UNIT FAILED SELF-TEST.

[a] The SATL shall determine if the ATA SMART EXECUTE OFF-LINE IMMEDIATE command is supported and enabled based on the ATA IDENTIFY DEVICE data word 84 bit 1, and word 85 bit 0 (see ATA8-ACS).

[b] The SATL may retry any of the three ATA Verify commands if an ATA Verify command fails on the first attempt, and the retried command may specify an alternate LBA. If the retried command completes without error, the SATL may consider the ATA Verify command as having completed without error.

Page: 69

Number: 1 Author: Kevin_Marks Subject: Cross-Out Date: 8/15/2008 1:24:06 PM -07'00'

Status
moverby Accepted 11/3/2008 6:05:49 PM
Author: moverby Subject: Sticky Note Date: 11/3/2008 6:05:46 PM
Rejected in favor of rewrite by Kevin Marks

Number: 2 Author: Kevin_Marks Subject: Highlight Date: 8/15/2008 1:26:15 PM -07'00'
The SELF-TEST CODE field is valid, and the
s/b
If the SELF-TEST CODE field is valid, the

Status
moverby Accepted 11/3/2008 6:05:34 PM

Number: 3 Author: Kevin_Marks Subject: Highlight Date: 8/15/2008 1:26:48 PM -07'00'
ATA Count field

Status
moverby Accepted 11/3/2008 6:05:53 PM

Number: 4 Author: Kevin_Marks Subject: Highlight Date: 8/15/2008 1:27:00 PM -07'00'
ATA LBA field

Status
moverby Accepted 11/3/2008 6:05:56 PM

Number: 5 Author: ENDL Texas Subject: Note Date: 9/2/2008 9:25:53 AM -07'00'
The unordered list looks as if someone might have intended it to be ordered. Or, is the goal that the three ATA verify commands can be sent in any order with respect to the contents of their LBA fields?

Status
moverby Rejected 9/9/2008 1:27:45 PM -07'00'
Author: moverby Subject: Sticky Note Date: 9/9/2008 12:54:38 PM -07'00'
Rejected: This is was intended to be unordered.

Status
moverby None 9/9/2008 1:27:49 PM -07'00'

Number: 6 Author: Kevin_Marks Subject: Highlight Date: 8/15/2008 1:28:36 PM -07'00'
ATA LBA Low register

Status
moverby Accepted 11/3/2008 6:06:00 PM

Number: 7 Author: Kevin_Marks Subject: Highlight Date: 8/15/2008 1:28:58 PM -07'00'
error, the
s/b
error, then the

Status
moverby Accepted 11/3/2008 6:06:03 PM

Number: 8 Author: Kevin_Marks Subject: Highlight Date: 8/15/2008 1:29:17 PM -07'00'
error, the
s/b
error, then the

Status
moverby Accepted 11/3/2008 6:06:06 PM

Number: 9 Author: HPQ-RElliott Subject: Highlight Date: 9/3/2008 9:42:24 AM -07'00'
DIAGNOSITC
s/b
DIAGNOSTIC

Status
moverby Accepted 11/3/2008 6:06:22 PM

8.12 TEST UNIT READY command

8.12.1 TEST UNIT READY command overview

The TEST UNIT READY command is used to determine whether the device is ready (see table 27).

Table 27 — TEST UNIT READY CDB field translations

Field	Description or reference
OPERATION CODE	Set to 09h. See 8.12.2.
CONTROL	6.5

8.12.2 TEST UNIT READY command translation

The SATL processes the TEST UNIT READY command as follows:

1) If any condition exists that prevents the SATL from issuing commands to the ATA device, the SATL should terminate the TEST UNIT READY command with CHECK CONDITION status with the sense key set to NOT READY with the additional sense code of LOGICAL UNIT NOT READY, CAUSE NOT REPORTABLE;
2) If the device is in the stopped state as the result of processing a START STOP UNIT command (see 9.11), then the SATL shall terminate the TEST UNIT READY command with CHECK CONDITION status with the sense key set to NOT READY and the additional sense code of LOGICAL UNIT NOT READY, INITIALIZING COMMAND REQUIRED;
3) If the ATA device is performing a self-test in the foreground mode, the SATL shall terminate the command with CHECK CONDITION status, with the sense key set to NOT READY, and the additional sense code set to LOGICAL UNIT NOT READY, SELF-TEST IN PROGRESS;
4) If the SATL is processing a FORMAT UNIT command for the emulated device (see 9.2), then the SATL shall terminate the TEST UNIT READY command with CHECK CONDITION status with the sense key set to NOT READY and the additional sense code set to LOGICAL UNIT NOT READY, FORMAT IN PROGRESS;
5) If the ATA device supports the Removable Media feature set (i.e., ATA IDENTIFY DEVICE data word 82 bit 2 is set to one), then the SATL shall send an ATA GET MEDIA STATUS command to the ATA device. If the ATA device completes the command with the NM bit set to one in the Error register, then the SATL shall terminate the TEST UNIT READY command with CHECK CONDITION status with the sense key set to NOT READY and the additional sense code of MEDIUM NOT PRESENT; and
6) If the ATA device completed the most recent ATA command with the DF bit set to one in the Status register, then the SATL shall terminate the TEST UNIT READY command with CHECK CONDITION status with the sense key set to HARDWARE ERROR and the additional sense code of LOGICAL UNIT FAILURE.

If none of the conditions defined in items 1 through 6 exist, then the SATL shall send an ATA CHECK POWER MODE command to the ATA device, and:

a) If the ATA CHECK POWER MODE command completes with an error, then the SATL shall terminate the TEST UNIT READY command with CHECK CONDITION status with the sense key set to NOT READY, and the additional sense code set to LOGICAL UNIT DOES NOT RESPOND TO SELECTION; or
b) If the ATA CHECK POWER MODE command completes without error, then the SATL shall complete the TEST UNIT READY command with GOOD status.

Page: 70

Number: 1 Author: HPQ-RElliott Subject: Note Date: 9/3/2008 9:42:24 AM -07'00'

delete whitespace above table 27

Status
moverby Accepted 11/3/2008 6:06:33 PM

Number: 2 Author: Kevin_Marks Subject: Highlight Date: 8/15/2008 3:28:09 PM -07'00'

device, the
s/b
device, then the

Status
moverby Accepted 11/3/2008 6:06:38 PM

Number: 3 Author: Kevin_Marks Subject: Highlight Date: 8/15/2008 3:20:31 PM -07'00'

the stopped state as
s/b
the stopped power condition as

Status
moverby Accepted 11/3/2008 6:06:47 PM

Number: 4 Author: LSI-Penokie Subject: Highlight Date: 8/19/2008 5:24:53 PM -07'00'

This << performing >> should be << processing >>

Status
moverby Accepted 11/3/2008 6:07:03 PM

Number: 5 Author: Kevin_Marks Subject: Highlight Date: 8/15/2008 3:28:26 PM -07'00'

mode, the
s/b
mode, then the

Status
moverby Accepted 11/3/2008 6:06:50 PM

Number: 6 Author: LSI-Penokie Subject: Highlight Date: 8/19/2008 5:26:28 PM -07'00'

This << 1 through 6 exist >> should be << 1 through 6 are valid >>

Status
moverby Accepted 11/3/2008 6:07:12 PM

8.13 WRITE BUFFER command

8.13.1 WRITE BUFFER command overview

The WRITE BUFFER command (see SPC-3) is used in conjunction with the READ BUFFER command as a diagnostic function for testing logical unit memory in the SCSI target device and the integrity of a service delivery subsystem. An additional mode is provided for downloading and saving microcode.

Table 28 shows the translation for fields specified in the WRITE BUFFER CDB.

Table 28 — WRITE BUFFER CDB field translations

Field	Description or reference
OPERATION CODE	Set to 3Bh. The SATL shall: a) send an ATA WRITE BUFFER command to the ATA device; b) send an ATA DOWNLOAD MICROCODE command to the ATA device; or c) emulate the specified function (i.e., if supported), depending on the values in the BUFFER ID field and MODE field (see 8.13.2.1).
MODE	8.13.2.1
BUFFER ID	If the the BUFFER ID field is set to 00h then the SATL shall transfer data to the buffer in the ATA device, download microcode to the ATA device, or emulate the specified WRITE BUFFER function, depending on the value set in the MODE field (see 8.13.2). If the the BUFFER ID field is set to a value other than 00h then the translation is unspecified (see 3.4.2), and the SATL shall process the WRITE BUFFER command as defined in SPC-3.
BUFFER OFFSET	The meaning of this field depends on the contents of the MODE field (see 8.13.2.1).
PARAMETER LIST LENGTH	The meaning of this field depends on the contents of the MODE field (see 8.13.2.1).
CONTROL	6.5

8.13.2 MODE field

8.13.2.1 MODE field overview

The MODE field specifies the function to be performed by the SATL. ~~If the MODE field is set to 02h, the SATL shall send an ATA WRITE BUFFER command to the ATA device. If the MODE field is set to 05h the SATL shall send a DOWNLOAD MICROCODE command to the ATA device as specified in table 29.~~

Table 29 — MODE field

Code	Description or reference
02h (i.e., Write data)	Translated to the ATA WRITE BUFFER command (see 8.13.2.2).
05h (i.e., Download microcode and save)	Translated to the ATA DOWNLOAD MICROCODE command. The features register shall be set to 07h indicating downloaded microcode is saved for immediate and future use (see 8.13.2.3).
07h (i.e., Download microcode with offsets, save, and activate)	Translated to the ATA DOWNLOAD MICROCODE command. The ATA Features field shall be set to 03h (i.e., download microcode with offsets is saved for immediate and future use).
All others	Unspecified (see 3.4.2)

Page: 71

Number: 1 Author: Kevin_Marks Subject: Highlight Date: 8/18/2008 11:28:17 AM -07'00'

(see SPC-3)
s/b
(see SPC-4)

Status
moverby Accepted 11/3/2008 6:07:24 PM

Number: 2 Author: Kevin_Marks Subject: Highlight Date: 8/18/2008 11:29:53 AM -07'00'

(i.e., if supported);

Does not sound like an i.e. ?

Status
moverby Accepted 11/3/2008 6:08:04 PM

Author: moverby Subject: Sticky Note Date: 11/3/2008 6:08:01 PM

Delete the i.e.

Number: 3 Author: HPQ-RElliott Subject: Highlight Date: 9/3/2008 9:42:24 AM -07'00'

;
s/b
,

Status
moverby Accepted 11/3/2008 6:07:50 PM

Number: 4 Author: HPQ-RElliott Subject: Highlight Date: 9/3/2008 9:42:24 AM -07'00'

convert this sentence into an a)b)c) list like the first row of the table.

Status
moverby Accepted 11/3/2008 6:08:20 PM

Number: 5 Author: Kevin_Marks Subject: Highlight Date: 8/18/2008 11:30:48 AM -07'00'

MODE
s/b
in small CAPS

Status
moverby Accepted 11/3/2008 6:08:26 PM

Number: 6 Author: HPQ-RElliott Subject: Highlight Date: 9/3/2008 9:42:24 AM -07'00'

the the
s/b
the

Status
moverby Accepted 11/3/2008 6:08:30 PM

Number: 7 Author: Kevin_Marks Subject: Highlight Date: 8/18/2008 11:31:22 AM -07'00'

SPC-3.
s/b
SPC-4.

Status
moverby Accepted 11/3/2008 6:08:34 PM

Number: 8 Author: ENDL Texas Subject: Highlight Date: 9/2/2008 9:26:08 AM -07'00'

The meaning of this field s/b The translation of this field

Status
moverby Accepted 11/3/2008 6:08:40 PM

Number: 9 Author: ENDL Texas Subject: Highlight Date: 9/2/2008 8:44:33 AM -07'00'

Status
moverby Accepted 11/3/2008 6:08:57 PM

Author: moverby Subject: Sticky Note Date: 11/3/2008 6:08:54 PM

s/b The translation of this field

Number: 10 Author: HPQ-RElliott Subject: Cross-Out Date: 9/3/2008 9:42:24 AM -07'00'

Delete:
If the MODE field is set to 02h, the SATL shall send an ATA WRITE BUFFER command to the ATA device. If the MODE field is set to 05h the SATL shall send a DOWNLOAD MICROCODE command to the ATA device as specified in table 29.

Those sentences omit 07h, and those rules already fully described by table 29.

Status
moverby Accepted 11/3/2008 6:09:11 PM

Number: 11 Author: Kevin_Marks Subject: Highlight Date: 8/18/2008 11:33:59 AM -07'00'

02h, the
s/b
02h, then the

Status
moverby Accepted 11/3/2008 6:09:15 PM

Number: 12 Author: Kevin_Marks Subject: Highlight Date: 8/18/2008 11:34:24 AM -07'00'

05h the
s/b
05h, then the

Comments from page 71 continued on next page

8.13 WRITE BUFFER command

8.13.1 WRITE BUFFER command overview

The WRITE BUFFER command (see SPC-3) is used in conjunction with the READ BUFFER command as a diagnostic function for testing logical unit memory in the SCSI target device and the integrity of a service delivery subsystem. An additional mode is provided for downloading and saving microcode.

Table 28 shows the translation for fields specified in the WRITE BUFFER CDB.

Table 28 — WRITE BUFFER CDB field translations

Field	Description or reference
OPERATION CODE	Set to 3Bh. The SATL shall: a) send an ATA WRITE BUFFER command to the ATA device; b) send an ATA DOWNLOAD MICROCODE command to the ATA device; or c) emulate the specified function (i.e., if supported); depending on the values in the BUFFER ID field and MODE field (see 8.13.2.1).
MODE	8.13.2.1
BUFFER ID	If the the BUFFER ID field is set to 00h then the SATL shall transfer data to the buffer in the ATA device, download microcode to the ATA device, or emulate the specified WRITE BUFFER function, depending on the value set in the MODE field (see 8.13.2). If the the BUFFER ID field is set to a value other than 00h then the translation is unspecified (see 3.4.2), and the SATL shall process the WRITE BUFFER command as defined in SPC-3.
BUFFER OFFSET	The meaning of this field depends on the contents of the MODE field (see 8.13.2.1).
PARAMETER LIST LENGTH	The meaning of this field depends on the contents of the MODE field (see 8.13.2.1).
CONTROL	6.5

8.13.2 MODE field

8.13.2.1 MODE field overview

The MODE field specifies the function to be performed by the SATL. ~~If the MODE field is set to 02h, the SATL shall send an ATA WRITE BUFFER command to the ATA device. If the MODE field is set to 05h the SATL shall send a DOWNLOAD MICROCODE command to the ATA device as specified in table 29.~~

Table 29 — MODE field

13

Code	Description or reference
02h (i.e., Write data)	Translated to the ATA WRITE BUFFER command (see 8.13.2.2).
05h (i.e., Download microcode and save)	Translated to the ATA DOWNLOAD MICROCODE command. The 15 features register shall be set to 07h 14 indicating downloaded microcode is saved for immediate and future use (see 8.13.2.3).
07h (i.e., Download microcode with offsets, save, and activate)	Translated to the ATA DOWNLOAD MICROCODE command. The ATA Features field shall be set to 03h (i.e., download microcode with offsets is saved for immediate and future use). 16
All others	Unspecified (see 3.4.2)

Status
moverby Accepted 11/3/2008 6:09:19 PM

Number: 13 Author: ENDL Texas Subject: Note Date: 9/2/2008 9:04:11 AM -07'00'

It looks like some but not all of the contents of table 29 is specified in the introduction to table 29. Is this necessary?

Status
moverby Accepted 11/3/2008 6:09:39 PM

Author: moverby Subject: Sticky Note Date: 11/3/2008 6:09:36 PM

Deleted much of intro paragraph from Rob Elliott comment.

Number: 14 Author: HPQ-RElliott Subject: Highlight Date: 9/3/2008 9:42:24 AM -07'00'

indicating
downloaded microcode is saved for immediate and future
use (see 8.13.2.3)

Convert to an (i.e.,)

Status
moverby Accepted 11/4/2008 10:31:19 AM

Author: moverby Subject: Sticky Note Date: 11/3/2008 6:10:28 PM

Inclination is to reject this command as not necessary.

Author: moverby Subject: Sticky Note Date: 11/4/2008 10:31:13 AM

Accept as an i.e.,

Number: 15 Author: HPQ-RElliott Subject: Highlight Date: 9/3/2008 9:42:24 AM -07'00'

features register
s/b
ATA Features field

Status
moverby Accepted 11/3/2008 6:09:51 PM

Number: 16 Author: HPQ-RElliott Subject: Note Date: 9/3/2008 9:42:24 AM -07'00'

In 07h row, add reference to 8.13.2.4.

Status
moverby Accepted 11/3/2008 6:10:45 PM

8.13.2.2 Write data mode

If:

a) the BUFFER ID field is set to 00h;
b) the BUFFER OFFSET field is set to 00h; and
c) the PARAMETER LIST LENGTH field is set to 512;

then the SATL shall write the specified number of bytes to the buffer in the ATA device by sending an ATA WRITE BUFFER command to the ATA device.

If the BUFFER ID FIELD is set to 00h and either:

a) the BUFFER OFFSET field is set to a value other than 00h; or
b) the PARAMETER LIST LENGTH field is set to a value other than 512;

then the SATL shall terminate the command with CHECK CONDITION status with the sense key set to ILLEGAL REQUEST with the additional sense code set to INVALID FIELD IN CDB.

The SATL may support a value other than 00h in the BUFFER ID field. If the SATL supports a value other than 00h in the BUFFER ID field the implementation shall be as defined in SPC-3.

8.13.2.3 Download microcode mode 05h

In this mode, data transferred to the SATL from the application client is transmitted to the ATA device using the ATA DOWNLOAD MICROCODE command.

The SATL shall send an ATA DOWNLOAD MICROCODE command with the ATA Features field set to 07h to the ATA device when it receives a WRITE BUFFER command with the MODE field set to 05h. The SATL shall transfer the microcode image or control information from the application client to the ATA device, and then complete the WRITE BUFFER command with GOOD status. The SATL shall check if the ATA DOWNLOAD MICROCODE command completed with an error. If the ATA DOWNLOAD MICROCODE command completed with an error, the SATL shall terminate the command with CHECK CONDITION status with the sense key and additional sense code set to values as described in clause 11.

After the ATA device reinitializes successfully, running the new microcode image, the SATL shall establish a unit attention condition (see SAM-4) for the initiator port associated with all I_T nexuses except the I_T nexus on which the set of WRITE BUFFER commands was received, with the additional sense code set to MICROCODE HAS BEEN CHANGED.

8.13.2.4 Download microcode mode 07h

In this mode, data transferred to the SATL from the application client is transmitted to the ATA device using the ATA DOWNLOAD MICROCODE command.

The SATL shall send an ATA DOWNLOAD MICROCODE command with the ATA field values specified in table 30 when it receives a WRITE BUFFER command with the MODE field set to 07h. The SATL shall transfer the microcode or control information from the application client to the ATA device. The SATL shall check if the ATA DOWNLOAD MICROCODE command completed with an error. If the ATA DOWNLOAD MICROCODE command completed with an error, the SATL shall terminate the command with CHECK CONDITION status with the sense key and additional sense code set as described in clause 11.

After the ATA device reinitializes successfully, running the new microcode, the SATL shall establish a unit attention condition (see SAM-4) for the initiator port associated with all I_T nexuses except the I_T nexus on which the set of WRITE BUFFER commands was received, with the additional sense code set to MICROCODE HAS BEEN CHANGED.

Number: 1 Author: ENDL Texas Subject: Note Date: 9/2/2008 9:06:51 AM -07'00'

Since 8.13.2.3 and 8.13.2.4 begin with an "In this mode ..." sentence, perhaps 8.13.2.2 should replicate that style.

Status
moverby Accepted 11/3/2008 6:11:02 PM

Number: 2 Author: LSI-Penokie Subject: Highlight Date: 8/19/2008 5:38:42 PM -07'00'

This << set to 512; >> should be << set to 512; >> i.e. semicolon replaced with comma.

Status
moverby Accepted 11/3/2008 6:11:16 PM

Number: 3 Author: HPQ-RElliott Subject: Highlight Date: 9/3/2008 9:42:24 AM -07'00'

;
s/b
,

Status
moverby Accepted 11/3/2008 6:11:07 PM

Number: 4 Author: LSI-Penokie Subject: Highlight Date: 8/19/2008 5:39:53 PM -07'00'

This << other than 512; >> should be << other than 512; >> i.e. semicolon replaced with comma.

Status
moverby Accepted 11/3/2008 6:11:23 PM

Number: 5 Author: HPQ-RElliott Subject: Highlight Date: 9/3/2008 9:42:24 AM -07'00'

;
s/b
,

Status
moverby Accepted 11/3/2008 6:11:20 PM

Number: 6 Author: HPQ-RElliott Subject: Highlight Date: 9/3/2008 9:42:24 AM -07'00'

field the
s/b
field, then the

Status
moverby Accepted 11/3/2008 6:11:33 PM

Number: 7 Author: Kevin_Marks Subject: Highlight Date: 8/18/2008 11:38:29 AM -07'00'

SPC-3.
s/b
SPC-4.

Status
moverby Accepted 11/3/2008 6:11:28 PM

Number: 8 Author: ENDL Texas Subject: Note Date: 9/2/2008 9:26:24 AM -07'00'

This paragraph appears to be telling the reader to return GOOD status and after that to determine if an error should be reported. It is tough to take back a GOOD status after it has been sent. Note that 8.13.2.4 does not have this problem.

Status
moverby Accepted 11/3/2008 6:13:19 PM

Author: moverby Subject: Sticky Note Date: 11/3/2008 6:13:15 PM

Fix by deleting the part about returning GOOD status here and move it to following the error condition text about ATA DOWNLOAD MICROCODE.

Number: 9 Author: LSI-Penokie Subject: Highlight Date: 8/19/2008 5:40:51 PM -07'00'

Should be << when the SATL receives >>

Status
moverby Accepted 11/3/2008 6:11:59 PM

Number: 10 Author: HPQ-RElliott Subject: Highlight Date: 9/3/2008 9:42:24 AM -07'00'

"and then complete the WRITE BUFFER command with GOOD status"

is technically wrong. Two sentences later says the command is terminated with CHECK CONDITION status if there is an error.

Status
moverby Accepted 11/3/2008 6:13:35 PM

Author: moverby Subject: Sticky Note Date: 11/3/2008 6:13:32 PM

Fixed with Ralph Weber comment resolution.

Number: 11 Author: ENDL Texas Subject: Highlight Date: 9/2/2008 9:26:34 AM -07'00'

RE: "The SATL shall check if the ATA DOWNLOAD MICROCODE command completed with an error." Is it possible to be more specific about how the SATL performs this check?

Status
moverby Accepted 11/3/2008 6:14:18 PM

Author: moverby Subject: Sticky Note Date: 11/3/2008 6:14:16 PM

Error checking is handled in ACS/ACS-2. Will add a See ACS-2.

Number: 12 Author: ENDL Texas Subject: Highlight Date: 9/2/2008 9:26:39 AM -07'00'

RE: "successfully, running" The comma should be removed.

Status
moverby Accepted 11/3/2008 6:14:25 PM

Number: 13 Author: HPQ-RElliott Subject: Highlight Date: 9/3/2008 9:42:24 AM -07'00'

set of WRITE BUFFER commands
s/b
WRITE BUFFER command

There is no "set" with mode 5h.

Comments from page 72 continued on next page

8.13.2.2 Write data mode

If:

a) the BUFFER ID field is set to 00h;
b) the BUFFER OFFSET field is set to 00h; and
c) the PARAMETER LIST LENGTH field is set to 512;

then the SATL shall write the specified number of bytes to the buffer in the ATA device by sending an ATA WRITE BUFFER command to the ATA device.

If the BUFFER ID FIELD is set to 00h and either:

a) the BUFFER OFFSET field is set to a value other than 00h; or
b) the PARAMETER LIST LENGTH field is set to a value other than 512;

then the SATL shall terminate the command with CHECK CONDITION status with the sense key set to ILLEGAL REQUEST with the additional sense code set to INVALID FIELD IN CDB.

The SATL may support a value other than 00h in the BUFFER ID field. If the SATL supports a value other than 00h in the BUFFER ID field the implementation shall be as defined in SPC-3.

8.13.2.3 Download microcode mode 05h

In this mode, data transferred to the SATL from the application client is transmitted to the ATA device using the ATA DOWNLOAD MICROCODE command.

The SATL shall send an ATA DOWNLOAD MICROCODE command with the ATA Features field set to 07h to the ATA device when it receives a WRITE BUFFER command with the MODE field set to 05h. The SATL shall transfer the microcode image or control information from the application client to the ATA device, and then complete the WRITE BUFFER command with GOOD status. The SATL shall check if the ATA DOWNLOAD MICROCODE command completed with an error. If the ATA DOWNLOAD MICROCODE command completed with an error, the SATL shall terminate the command with CHECK CONDITION status with the sense key and additional sense code set to values as described in clause 11.

After the ATA device reinitializes successfully, running the new microcode image, the SATL shall establish a unit attention condition (see SAM-4) for the initiator port associated with all I_T nexuses except the I_T nexus on which the set of WRITE BUFFER commands was received, with the additional sense code set to MICROCODE HAS BEEN CHANGED.

8.13.2.4 Download microcode mode 07h

In this mode, data transferred to the SATL from the application client is transmitted to the ATA device using the ATA DOWNLOAD MICROCODE command.

The SATL shall send an ATA DOWNLOAD MICROCODE command with the ATA field values specified in table 30 when it receives a WRITE BUFFER command with the MODE field set to 07h. The SATL shall transfer the microcode or control information from the application client to the ATA device. The SATL shall check if the ATA DOWNLOAD MICROCODE command completed with an error. If the ATA DOWNLOAD MICROCODE command completed with an error, the SATL shall terminate the command with CHECK CONDITION status with the sense key and additional sense code set as described in clause 11.

After the ATA device reinitializes successfully, running the new microcode, the SATL shall establish a unit attention condition (see SAM-4) for the initiator port associated with all I_T nexuses except the I_T nexus on which the set of WRITE BUFFER commands was received, with the additional sense code set to MICROCODE HAS BEEN CHANGED.

Status
moverby Accepted 11/3/2008 6:14:45 PM

Number: 14 Author: LSI-Penokie Subject: Highlight Date: 8/19/2008 5:41:42 PM -07'00'

Should be << when the SATL receives >>

Status
moverby Accepted 11/3/2008 6:14:58 PM

Number: 15 Author: HPQ-RElliott Subject: Highlight Date: 9/3/2008 9:42:24 AM -07'00'

MODE
s/b
smallcaps

Status
moverby Accepted 11/3/2008 6:14:52 PM

Number: 16 Author: ENDL Texas Subject: Highlight Date: 9/2/2008 9:26:48 AM -07'00'

RE: "successfully, running" The comma should be removed.

Status
moverby Accepted 11/3/2008 6:15:02 PM

Table 30 — Download Microcode Mode 07h ATA Field Values

ATA Field		Contents
Field Name	Bits	
Features	07:00	03h
LBA	27:24	Restricted
	23	0h
	22:08	BUFFER OFFSET field bits 23:09
	07	0h
	06:00	PARAMETER LIST LENGTH field bits 23:17
Count	07:00	PARAMETER LIST LENGTH field bits 16:09

If the PARAMETER LIST LENGTH field bits 08:00 is a non-zero value, then the SATL shall terminate the command with CHECK CONDITION status, with the sense key set to ILLEGAL REQUEST, and the additional sense code set to INVALID FIELD IN CDB.

If the BUFFER OFFSET field bits 08:00 is a non-zero value, then the SATL shall terminate the command with CHECK CONDITION status, with the sense key set to ILLEGAL REQUEST, and the additional sense code set to INVALID FIELD IN CDB.

If the PARAMETER LIST LENGTH field is greater than IDENTIFY DEVICE data Word 235 and the IDENTIFY DEVICE data Word 235 is a non-zero value, then the SATL shall either translate the transfer into multiple ATA DOWNLOAD MICROCODE commands or terminate the command with CHECK CONDITION status, with the sense key set to ILLEGAL REQUEST, and the additional sense code set to INVALID FIELD IN CDB.

If the PARAMETER LIST LENGTH field is less than IDENTIFY DEVICE data Word 234 and IDENTIFY DEVICE data Word 234 is a non-zero value, then the SATL shall terminate the command with CHECK CONDITION status, with the sense key set to ILLEGAL REQUEST, and the additional sense code set to INVALID FIELD IN CDB

The SATL may translate a single WRITE BUFFER mode 07h request into multiple ATA DOWNLOAD MICROCODE commands.

If the combination of the BUFFER OFFSET and PARAMETER LIST LENGTH field values result in a non-sequential or overlapping request and the ATA device returns an ATA abort status, the SATL shall terminate the command with CHECK CONDITION status, with the sense key set to ILLEGAL REQUEST, and the additional sense code set to INVALID FIELD IN CDB.

Number: 1 Author: Kevin_Marks Subject: Highlight Date: 8/18/2008 11:42:26 AM -07'00'
Table 30 — Download Microcode Mode 07h ATA Field Values

Remove black box/save toner.

Status
moverby Accepted 11/3/2008 6:15:32 PM

Number: 2 Author: STX-Hatfield Subject: Note Date: 8/12/2008 1:19:55 PM -07'00'
(formatting)
What is this blacked-out cell ?

Status
moverby Accepted 11/3/2008 6:15:53 PM

Author: moverby Subject: Sticky Note Date: 11/3/2008 6:15:49 PM
It's an empty, to be ignored cell. Will change to a straddle on Contents.

Number: 3 Author: ENDL Texas Subject: Note Date: 9/2/2008 9:26:52 AM -07'00'
Why is there a black hole in this table? Which element of the T10 Style Guide requires this to be present?

Status
moverby Accepted 9/9/2008 1:27:35 PM -07'00'

Author: moverby Subject: Sticky Note Date: 9/9/2008 1:01:42 PM -07'00'
Straddle contents header

Status
moverby None 9/9/2008 1:27:39 PM -07'00'

Number: 4 Author: HPQ-RElliott Subject: Highlight Date: 9/3/2008 9:42:24 AM -07'00'
Field Name Bits
s/b bold

Status
moverby Accepted 11/3/2008 6:16:01 PM

Number: 5 Author: HPQ-RElliott Subject: Note Date: 9/3/2008 9:42:24 AM -07'00'
delete the black fill in table 30; straddle cell vertically with Contents

Status
moverby Accepted 11/3/2008 6:16:06 PM

Number: 6 Author: HPQ-RElliott Subject: Highlight Date: 9/3/2008 9:42:24 AM -07'00'
07:00
s/b
7:0

(similarly through table 30 and 8.13.2.4, delete leading 0s in the decimal bit numbers)

Status
moverby Accepted 11/3/2008 6:16:17 PM

Number: 7 Author: Kevin_Marks Subject: Highlight Date: 8/18/2008 11:42:45 AM -07'00'
0h
s/b
0b

Status
moverby Accepted 11/3/2008 6:16:27 PM

Number: 8 Author: Kevin_Marks Subject: Highlight Date: 8/18/2008 11:42:54 AM -07'00'
0h
s/b
0b

Status
moverby Accepted 11/3/2008 6:16:30 PM

Number: 9 Author: Kevin_Marks Subject: Highlight Date: 8/18/2008 11:47:14 AM -07'00'
IDENTIFY DEVICE data Word 235 and the IDENTIFY DEVICE data Word 235 is a non-zero value
s/v
the contents of the ATA IDENTIFY DEVICE data Word 235 and the ATA IDENTIFY DEVICE data Word 235 is a non-zero value

Status
moverby Accepted 11/3/2008 6:16:57 PM

Author: moverby Subject: Sticky Note Date: 11/3/2008 6:16:54 PM
Accepted except change is to are.

Number: 10 Author: ENDL Texas Subject: Highlight Date: 9/2/2008 9:27:00 AM -07'00'
IF s/b If

Status
moverby Accepted 11/3/2008 6:17:15 PM

Number: 11 Author: Kevin_Marks Subject: Highlight Date: 8/18/2008 11:49:48 AM -07'00'
"than IDENTIFY DEVICE data Word 234 and IDENTIFY DEVICE data Word 234 is a non-zero value"
s/b
"than the contents of the ATA IDENTIFY DEVICE data Word 234 and the ATA IDENTIFY DEVICE data Word 234 is a non-zero value"

Status
moverby Accepted 11/3/2008 6:17:35 PM

Author: moverby Subject: Sticky Note Date: 11/3/2008 6:17:32 PM
Accepted. Change is to are.

Comments from page 73 continued on next page

Table 30 — Download Microcode Mode 07h ATA Field Values

ATA Field		Contents
Field Name	Bits	
Features	07:00	03h
LBA	27:24	Restricted
	23	0h
	22:08	BUFFER OFFSET field bits 23:09
	07	0h
	06:00	PARAMETER LIST LENGTH field bits 23:17
Count	07:00	PARAMETER LIST LENGTH field bits 16:09

If the PARAMETER LIST LENGTH field bits 08:00 is a non-zero value, then the SATL shall terminate the command with CHECK CONDITION status, with the sense key set to ILLEGAL REQUEST, and the additional sense code set to INVALID FIELD IN CDB.

If the BUFFER OFFSET field bits 08:00 is a non-zero value, then the SATL shall terminate the command with CHECK CONDITION status, with the sense key set to ILLEGAL REQUEST, and the additional sense code set to INVALID FIELD IN CDB.

If the PARAMETER LIST LENGTH field is greater than IDENTIFY DEVICE data Word 235 and the IDENTIFY DEVICE data Word 235 is a non-zero value, then the SATL shall either translate the transfer into multiple ATA DOWNLOAD MICROCODE commands or terminate the command with CHECK CONDITION status, with the sense key set to ILLEGAL REQUEST, and the additional sense code set to INVALID FIELD IN CDB.

12 If the 14 PARAMETER LIST LENGTH field is less than IDENTIFY DEVICE data Word 234 and IDENTIFY DEVICE data Word 234 is a non-zero value, then the SATL shall terminate the command with CHECK CONDITION status, with the sense key set to ILLEGAL REQUEST, and the additional sense code set to INVALID FIELD IN CDB

The SATL may translate a single WRITE BUFFER mode 07h request into multiple ATA DOWNLOAD MICROCODE commands.

If the combination of the 118 BUFFER OFFSET and 19 PARAMETER LIST LENGTH field values result in a non-sequential or overlapping request and the ATA device returns an ATA abort status, the SATL shall terminate the command with CHECK CONDITION status, with the sense key set to ILLEGAL REQUEST, and the additional sense code set to INVALID FIELD IN CDB.

Number: 12 Author: Kevin_Marks Subject: Highlight Date: 8/18/2008 11:48:10 AM -07'00'

IF
s/b
If

Status
moverby Accepted 11/3/2008 6:17:08 PM

Number: 13 Author: ENDL Texas Subject: Highlight Date: 9/2/2008 9:26:56 AM -07'00'

PARAMETER LIST LENGTH should be in small caps

Status
moverby Accepted 11/3/2008 6:17:20 PM

Number: 14 Author: Kevin_Marks Subject: Highlight Date: 8/18/2008 11:48:33 AM -07'00'

PARAMETER LIST LENGTH
s/b
in small CAPS

Status
moverby Accepted 11/3/2008 6:17:03 PM

Number: 15 Author: Kevin_Marks Subject: Highlight Date: 8/18/2008 11:50:58 AM -07'00'

BUFFER OFFSET and PARAMETER LIST LENGTH field
s/b
BUFFER OFFSET field and PARAMETER LIST LENGTH field

and make fields in small CAPS

Status
moverby Accepted 11/3/2008 6:18:00 PM

Number: 16 Author: LSI-Penokie Subject: Highlight Date: 8/19/2008 5:48:06 PM -07'00'

This << BUFFER OFFSET and PARAMETER LIST LENGTH field >> should be << BUFFER OFFSET field and PARAMETER LIST LENGTH field >>
Also, both field names should be in small caps.

Status
moverby Accepted 11/3/2008 6:17:57 PM

Number: 17 Author: ENDL Texas Subject: Highlight Date: 9/2/2008 9:27:06 AM -07'00'

BUFFER OFFSET and PARAMETER LIST LENGTH field
s/b
BUFFER OFFSET field and PARAMETER LIST LENGTH field
[with the field names in small caps]

Status
moverby Accepted 11/3/2008 6:17:48 PM

Number: 18 Author: HPQ-RElliott Subject: Highlight Date: 9/3/2008 9:42:24 AM -07'00'

BUFFER OFFSET
s/b
smallcaps

Status
moverby Accepted 11/3/2008 6:17:52 PM

Number: 19 Author: HPQ-RElliott Subject: Highlight Date: 9/3/2008 9:42:24 AM -07'00'

PARAMETER LIST LENGTH
s/b
smallcaps

Status
moverby Accepted 11/3/2008 6:17:43 PM

9 SCSI Block Commands (SBC) mapping

9.1 Translating LBA and transfer length and ATA command use constraints

9.1.1 Overview

A SATL may implement a direct logical block mapping of ATA logical sectors to SCSI logical blocks (see 9.1.2), or the SATL may implement indirect logical block mapping translation (see 9.1.3).

9.1.2 Direct logical block mapping model

If the SATL implements direct logical block mapping (see 3.1.35), the logical block size indicated by the BLOCK LENGTH IN BYTES field in the READ CAPACITY data (see 9.8.2 and 9.9.2) shall equal the ATA logical sector size (see 3.1.16). The ATA LBA of an ATA logical sector shall equal the logical block address of the corresponding SCSI logical block.

9.1.3 Indirect logical block mapping model

If the SATL implements indrect block mapping (see 3.1.39), the constraints of the direct logical block mapping model do not apply. The logical block size indicated by the BLOCK LENGTH IN BYTES field in the READ CAPACITY data (see 9.8.2 and 9.9.2) may not equal the ATA logical sector size (see 3.1.16) (e.g., SCSI logical block size of 520 bytes with an ATA Logical Sector Size of 512 bytes). The SATL translates between the SCSI LOGICAL BLOCK ADDRESS field and the ATA LBA in a vendor-specific manner. The result of a logical block address translated in one direction and then translated in the reverse direction shall yield the original logical block address.

9.1.4 Selection of ATA block commands

The ATA commands the SATL may use to implement the functions specified by SCSI block commands depend upon:

a) the value of the LOGICAL BLOCK ADDRESS and TRANSFER LENGTH fields specified in the SCSI CDB; and
b) the capabilities of the ATA device and the ATA host within the SATL.

Table 31 relates selection conditions to allowable ATA commands used to implement SCSI block storage data transfer commands. ATA commands listed in the Allowed ATA commands column shall not be used in the emulation of a SCSI block command if the prerequisite conditions listed in Selection Prerequisites columns are not met (i.e., the word 'yes' in a Selection Prerequisites column means the prerequisite shall be met before the SATL may use an ATA command listed in that row, and the word 'no' indicates the prerequisite need not be met for the SATL to use the ATA command listed).

Page: 74

Number: 1 Author: HPQ-RElliott Subject: Highlight Date: 9/3/2008 9:42:24 AM -07'00'

mapping
s/b
command mapping

since SBC mode pages, VPD pages, etc. are not described in section 9

Status
moverby Accepted 11/3/2008 6:23:28 PM

Number: 2 Author: HPQ-RElliott Subject: Highlight Date: 9/3/2008 9:42:24 AM -07'00'

may implement...

convert into a) b) list

Status
moverby Rejected 11/3/2008 6:23:48 PM

Number: 3 Author: Kevin_Marks Subject: Cross-Out Date: 8/19/2008 2:25:51 PM -07'00'

Status
moverby Accepted 11/3/2008 6:23:57 PM

Number: 4 Author: Kevin_Marks Subject: Highlight Date: 8/19/2008 2:26:24 PM -07'00'

(see 3.1.35), the
s/b
(see 3.1.35), then the

Status
moverby Accepted 11/3/2008 6:24:02 PM

Number: 5 Author: HPQ-RElliott Subject: Highlight Date: 9/3/2008 9:42:24 AM -07'00'

Size

should probably be lowercase

Status
moverby Accepted 11/3/2008 6:25:13 PM

Number: 6 Author: Kevin_Marks Subject: Highlight Date: 8/19/2008 2:27:09 PM -07'00'

Size
s/b
size

Status
moverby Accepted 11/3/2008 6:25:09 PM

Number: 7 Author: HPQ-RElliott Subject: Highlight Date: 9/3/2008 9:42:24 AM -07'00'

indrect
s/b
indirect

Status
moverby Accepted 11/3/2008 6:25:22 PM

Number: 8 Author: Kevin_Marks Subject: Highlight Date: 8/19/2008 2:28:03 PM -07'00'

(see 3.1.39), the
s/b
(see 3.1.39), then the

Status
moverby Accepted 11/3/2008 6:25:17 PM

Number: 9 Author: Kevin_Marks Subject: Highlight Date: 8/19/2008 2:30:07 PM -07'00'

LOGICAL BLOCK ADDRESS and
s/b
LOGICAL BLOCK ADDRESS field and

Status
moverby Rejected 11/3/2008 6:26:19 PM

Author: moverby Subject: Sticky Note Date: 11/3/2008 6:26:15 PM

fields at the end of transfer length covers both fields.

Number: 10 Author: LSI-Penokie Subject: Highlight Date: 8/19/2008 5:51:15 PM -07'00'

Should be << LOGICAL BLOCK ADDRESS field and >>

Status
moverby Rejected 11/3/2008 6:25:55 PM

Author: moverby Subject: Sticky Note Date: 11/3/2008 6:25:49 PM

fields at the end of transfer length covers both.

Page: 75

Number: 1 Author: Kevin_Marks Subject: Sticky Note Date: 8/19/2008 2:31:07 PM -07'00'

Remove empty page on Page 57 or page 75 of 166 in PDF

Status
moverby Accepted 11/3/2008 6:26:36 PM

Number: 2 Author: LSI-Penokie Subject: Sticky Note Date: 8/19/2008 5:52:33 PM -07'00'

Get rid of this blank page.

Status
moverby Accepted 11/3/2008 6:26:40 PM

Table 31 — ATA commands used for SCSI block command translations

Selection Prerequisites [a]					Allowed ATA commands
Highest ATA logical sector accessed	ATA feature sets required to be supported and enabled [d]				
Required that the logical sector address is < 2^{28} [b]	48-bit Address [b]	DMA [c]	~~Overlap~~	SATA-2.6 NCQ	
no	no	no	no	no	FLUSH CACHE WRITE UNCORRECTABLE EXT
yes [e]	no	no	no	no	READ MULTIPLE READ SECTOR(S) READ VERIFY SECTOR(S) WRITE MULTIPLE WRITE SECTOR(S)
yes [e]	no	yes	no	no	READ DMA WRITE DMA
yes [e]	no	yes	yes	no	READ DMA QUEUED WRITE DMA QUEUED
no	yes	yes	no	no	FLUSH CACHE EXT READ DMA EXT WRITE DMA EXT WRITE DMA FUA EXT
no	yes	yes	yes	n/a	READ DMA QUEUED EXT WRITE DMA QUEUED EXT WRITE DMA QUEUED FUA EXT
no	yes	no	no	no	READ MULTIPLE EXT READ SECTOR(S) EXT READ VERIFY SECTOR(S) EXT WRITE MULTIPLE EXT WRITE MULTIPLE FUA EXT WRITE SECTOR(S) EXT
no	no	no	no	yes	READ FPDMA QUEUED WRITE FPDMA QUEUED

[a] If the SATL implements the direct mapping model (see 9.1.2) between ATA logical sectors and SCSI logical blocks, then this represents the last logical block transferred. If the SATL implements the indirect logical block mapping model, then this constraint is vendor-specific.

[b] If the ATA device supports neither the 48-bit Address feature set (i.e., ATA IDENTIFY DEVICE data word 83 bit 10 is set to zero) nor NCQ (see SATA-2.6) and the LBA of the logical sector is greater than (2^{28}-1), the SATL shall terminate the command with CHECK CONDITION status with the sense key set to ILLEGAL REQUEST and the sense code set to LOGICAL BLOCK ADDRESS OUT OF RANGE.

[c] The DMA prerequisite requires both the ATA host in the SATL and the ATA device to have the same DMA transfer mode enabled (i.e., ATA IDENTIFY DEVICE data word 49 bit 8 is set to one and at least one DMA mode is enabled in the ATA IDENTIFY DEVICE data word 63 or word 88).

[d] See ATA8-ACS.

[e] The SATL may transfer the number of logical blocks requested in the TRANSFER LENGTH field of the SCSI CDB by sending multiple ATA commands, each time incrementing the ATA LBA by the ATA Sector Count transferred.

Page: 76

Number: 1 Author: HPQ-RElliott Subject: Note Date: 9/3/2008 9:42:24 AM -07'00'

Delete blank page above table 31.

If that makes the table wrap pages, add (page 1 of 2) to table title

Status
moverby Accepted 11/3/2008 6:26:51 PM

Number: 2 Author: HPQ-RElliott Subject: Highlight Date: 9/3/2008 9:42:24 AM -07'00'

SATA-2.6 NCQ
s/b
NCQ

because ATA8-ACS defines this feature set, mentioning SATA-2.6 in the name is not necessary (although the details are in SATA-2.6, SAT doesn't need to say that)

Status
moverby Accepted 11/3/2008 6:27:03 PM

Number: 3 Author: HPQ-RElliott Subject: Cross-Out Date: 9/3/2008 9:42:24 AM -07'00'

The Overlap feature set no longer exists in ATA8-ACS

Status
moverby Accepted 11/3/2008 6:28:14 PM

Author: moverby Subject: Sticky Note Date: 11/3/2008 6:28:12 PM

The feature set does exist but it is called the TCQ feature set. Rejected in part and affirmed in part.

Number: 4 Author: HPQ-RElliott Subject: Highlight Date: 9/3/2008 9:42:24 AM -07'00'

DMA is not a "feature set" so doesn't really fit as a column labeled "ATA feature sets required to be supported and enabled"

Status
moverby Accepted 11/3/2008 6:29:00 PM

Author: moverby Subject: Sticky Note Date: 11/3/2008 6:28:57 PM

change column header to be "ATA features..."

Number: 5 Author: Kevin_Marks Subject: Sticky Note Date: 8/19/2008 2:33:26 PM -07'00'

KEVIN MARKS COMMENT - NEED ANSWER:

Need to check if write uncorrectable needs to be added to table, and possibly other

Status
moverby Rejected 9/9/2008 1:27:21 PM -07'00'

Author: moverby Subject: Sticky Note Date: 9/9/2008 1:03:07 PM -07'00'

Rejected as already in table

Status
moverby None 9/9/2008 1:27:25 PM -07'00'

The SATL may use the ATA commands listed in table 31 in the translation of SCSI read commands (see 3.1.76), SCSI write commands (see 3.1.80), SCSI write and verify commands (see 3.1.81), SCSI verify commands (see 3.1.79), and SCSI synchronize cache commands (see 3.1.77) if the prerequisites defined for the command as shown in table 31 are satisfied. The translations for specific SCSI block commands in clause 9 further constrain the use of the available ATA commands in implementing the translation.

The SATL emulation of the READ (6) command and the WRITE (6) command in which the TRANSFER LENGTH field is set to zero, shall translate the transfer length to 256, and send ATA commands that operate on the ATA logical sectors corresponding to the specified 256 SCSI logical blocks.

In all other cases, the SATL shall transfer or operate on the ATA logical sectors corresponding to the number of logical blocks specified by the SCSI command.

9.2 FORMAT UNIT command

9.2.1 FORMAT UNIT command overview

The FORMAT UNIT command verifies that all logical block addresses accessible to SCSI application clients are formatted and ready for data transfers. Table 32 shows the translation for fields 1 ~~specified~~ in the FORMAT UNIT CDB.

Table 32 — FORMAT UNIT CDB field translations

Field	Description or reference
OPERATION CODE	Set to 04h. If no defect list header is provided or a defect list header is provided with the DCRT bit set to one, then the SATL shall return GOOD status without issuing any commands to the ATA device. If the SATL supports certification of media and a defect list header is provided with the DCRT bit set to zero, then the SATL shall certify the media as described in 9.2.5
DEFECT LIST FORMAT	If the DEFECT LIST FORMAT field is the mandatory format (000b) or the vendor specific 3 format (110b) the defect list length shall be zero 4 (see SBC-2). If the DEFECT LIST FORMAT field is any other value the SATL shall terminate the command with CHECK CONDITION status with the sense key set to ILLEGAL REQUEST and the additional sense code set to INVALID FIELD IN CDB.
CMPLIST	If a complete list is specified (i.e., the FMTDATA bit is set to one, and the CMPLIST bit is set to 5 one) then the SATL shall terminate the command with a CHECK CONDITION status with sense key set to ILLEGAL REQUEST and additional sense code set to INVALID FIELD IN CDB.
FMTDATA	If set to zero no data shall be transferred from the application client. If set to one the FORMAT UNIT parameter list shall be transferred from the application client. The SATL may accept a FORMAT UNIT parameter list (see 9.2.2). The SATL shall ignore any defect list descriptors and any other fields provided in the FORMAT UNIT parameter list.
LONGLIST	Unspecified (see 3.4.2)
FMTPINFO	Unspecified (see 3.4.2)
RTO_REQ	If the RTO_REQ bit is set to one and the SATL implements direct logical block mapping (see 3.1.35), then the SATL shall terminate the command with CHECK CONDITION status with sense key set to ILLEGAL REQUEST and additional sense code set to INVALID FIELD IN CDB. If the SATL implements indirect logical block mapping, the translation for this field is unspecified (see 3.4.2).
CONTROL	6.5

The SATL shall process commands received during the processing of the FORMAT UNIT command as specified in 6 SBC-2.

Page: 77

Number: 1 Author: HPQ-RElliott Subject: Cross-Out Date: 9/3/2008 9:42:24 AM -07'00'

Delete
specified

for consistency

Status
moverby Accepted 11/3/2008 6:29:12 PM

Number: 2 Author: HPQ-RElliott Subject: Note Date: 9/3/2008 9:42:24 AM -07'00'

The usual sorting of fields in SCSI standards is top-to-bottom, left-to-right, so this should be:
OPERATION CODE
FMTPINFO
LONGLIST
FMTDATA
CMPLIST
DEFECT LIST FORMAT

Status
moverby Accepted 11/3/2008 6:29:24 PM

Number: 3 Author: LSI-Penokie Subject: Highlight Date: 8/19/2008 5:56:11 PM -07'00'

Should be << format (110b), then the defect >>

Status
moverby Accepted 11/3/2008 6:29:33 PM

Number: 4 Author: Kevin_Marks Subject: Highlight Date: 8/19/2008 2:44:22 PM -07'00'

(see SBC-2).
s/b
(see SBC-3).

Status
moverby Accepted 11/3/2008 6:29:28 PM

Number: 5 Author: LSI-Penokie Subject: Highlight Date: 8/19/2008 5:55:49 PM -07'00'

Should be << one), then the >>

Status
moverby Accepted 11/3/2008 6:29:37 PM

Number: 6 Author: Kevin_Marks Subject: Highlight Date: 8/19/2008 2:46:30 PM -07'00'

SBC-2.
s/b
SBC-3.

Status
moverby Accepted 11/3/2008 6:29:40 PM

9.2.2 FORMAT UNIT parameter list

If the FORMAT command CDB specifies a FMTDATA bit of one, the SATL shall accept a FORMAT UNIT parameter list consisting of a short or long defect list header and may accept an initialization pattern descriptor. The SATL shall ignore any defect descriptors provided. Table 33 defines the SATL handling of fields in the FORMAT UNIT defect list header.

Table 33 — SATL defect list header

Field	Description or reference
FOV	9.2.3 and 9.2.4
DPRY	The SATL shall ignore this field.
DCRT	9.2.3 and 9.2.5
STPF	Unspecified (see 3.4.2)
IP	9.2.3 and 9.2.6
IMMED	9.2.3
DEFECT LIST LENGTH	The SATL shall ignore any defect descriptors provided.

9.2.3 SATL defect list header field combinations

Table 34 describes the actions the SATL takes depending on the values set in the IMMED bit, the FOV bit, the DCRT bit, and the IP bit.

Table 34 — SATL defect list header field combinations

IMMED	FOV	DCRT	IP	Description of SATL processing
1	n/a	n/a	n/a	The SATL may complete the FORMAT UNIT command immediately with GOOD status.
n/a	0	n/a	n/a	
n/a	1	1	0	
0	1	0	0	If the SATL does not support media certification, then the SATL may terminate the command with CHECK CONDITION status with the sense key set to ILLEGAL REQUEST with the additional sense code set to INVALID FIELD PARAMETER LIST. Otherwise, the SATL shall send the required ATA read commands and ATA write commands to certify and initialize the media as specified by DCRT bit and IP bit, and shall then return GOOD status if no unrecoverable write errors occur.
		0	1	
		1	1	

9.2.4 FOV bit

The FOV bit may be set to one to include an initialization pattern descriptor and no defect descriptors, otherwise the SATL may terminate the command with CHECK CONDITION status with the sense key set to ILLEGAL REQUEST with the additional sense code set to INVALID FIELD PARAMETER LIST.

9.2.5 DCRT bit

If the DCRT bit is set to zero and media certification is supported by the SATL, then the SATL shall send ATA verify commands (see 3.1.24) to access all the logical sectors on the medium of the ATA device that the SATL uses to emulate logical blocks accessible by the application client. For every unrecoverable read error that is encountered, the SATL shall send an ATA write command (see 3.1.26) to the defective logical sector to attempt to cause logical sector reallocation. The data written shall be the data pattern specified by the initialization pattern descriptor, if any, or vendor-specific. After writing the affected logical sector, the SATL shall again send an ATA verify command to the same logical sector to verify the alternate logical sector is not defective. The process (e.g., verify, write, verify, write, etc.) shall repeat until the logical sector is verified

Page: 78

Number: 1 Author: Kevin_Marks Subject: Highlight Date: 8/19/2008 2:47:55 PM -07'00'

a FMTDATA bit of one, the SATL

s/b

a FMTDATA bit set to one, then the SATL

Status

moverby Accepted 11/3/2008 6:29:50 PM

Number: 2 Author: Kevin_Marks Subject: Highlight Date: 8/19/2008 2:50:23 PM -07'00'

shouldn't the be read error

Status

moverby Accepted 11/3/2008 6:30:20 PM

successfully or the disk returns a fatal error other than an unrecoverable read error (e.g., device fault). See 5.4 for a description of error handling for multiple ATA command sequences.

9.2.6 IP bit

If the SATL supports an IP bit value of one and the IP bit is set to one, the SATL shall process the command as follows:

a) If the ATA device supports the SCT LBA Segment Access (see SCT) command and the value of the INITIALIZATION PATTERN LENGTH field in the initialization pattern descriptor is four, and the value of the IP MODIFIER field in the initialization pattern descriptor is zero, then the SATL should send an SCT LBA Segment Access command to the ATA device with the Function Code field set to 0001b (i.,e., Repeat Write Pattern), with the Start field and the Count field set to initialize the area of the media accessible by the application client, and with the Pattern field set to the value of the INITIALIZATION PATTERN field from the FORMAT command initialization pattern descriptor; and
b) if the SCT LBA Segment Access command is not used to write the initialization pattern, then the SATL shall write the specified pattern by issuing ATA write commands (see 3.1.26 and 9.1) to the ATA device.

If the IP bit is set to zero, then the SATL shall return GOOD status.

NOTE 10 - The SATL should reverse the order of the bytes between the Pattern field in the SCT LBA Segment Access command and the value stored in the INITIALIZATION PATTERN field in the FORMAT command initialization pattern descriptor to adjust for the translation from little-endian to big-endian byte ordering.

9.3 READ commands overview

9.3.1 READ commands operation code translation

This subclause applies to the translation of READ(6), READ(10), READ(12), and READ(16) commands.

The SATL shall send ATA read commands (see 3.1.21) in accordance with the constraints specified in 9.1 to cause the ATA device to transfer the logical blocks specified in the SCSI read command (see 3.1.76).

If the SATL returns a CHECK CONDITION status with a sense key set to a value other than ILLEGAL REQUEST while processing the command, the SATL may transfer a vendor-specific amount of data before terminating the command.

9.3.2 READ commands with FUA

If the SATL does not support FUA and the FUA bit is set to one, the SATL shall terminate the READ (10), READ (12) or READ (16) command with CHECK CONDITION status with the sense key set to ILLEGAL REQUEST and the additional sense code set to INVALID FIELD IN CDB.

The SATL shall process a SCSI read command with the FUA bit set to one as follows:

a) If the ATA device supports NCQ (i.e., ATA IDENTIFY DEVICE data word 76 bit 8 is set to one) the SATL shall send a READ FPDMA QUEUED command (see SATA-2.6) with the FUA bit in the Device register set to one;
b) If the ATA device supports the TCQ (see ATA8-ACS) and there are outstanding ATA queued commands, then the SATL shall:
   1) wait until all ATA queued commands have completed;
   2) if the write cache is enabled (ATA8-ACS) on the ATA device, send an ATA verify command (see 3.1.24); and,
   3) send an ATA read command as specified in 9.3.1;

   or

c) If the ATA device supports neither NCQ nor TCQ, or there are no outstanding ATA queued commands, then the SATL shall:
   1) if the write cache is enabled on the ATA device, send an ATA verify command (see 3.1.24); and,
   2) send an ATA read command as specified in 9.3.1.

Page: 79

Number: 1 Author: moverby Subject: Sticky Note Date: 10/20/2008 5:54:08 PM -07'00'

Rewrite 9.2.6 into a table of conditions and how to handle.

Status
moverby Rejected 11/3/2008 6:30:41 PM

Number: 2 Author: moverby Subject: Highlight Date: 10/20/2008 5:47:39 PM -07'00'

ATA8-ACS changes this to SCT Write Same

Status
moverby Accepted 11/3/2008 6:30:48 PM

Number: 3 Author: Kevin_Marks Subject: Highlight Date: 8/19/2008 2:53:37 PM -07'00'

(see SCT)
s/b
(see ATA8-ACS)

Status
moverby Accepted 11/3/2008 6:30:52 PM

Number: 4 Author: Kevin_Marks Subject: Highlight Date: 8/19/2008 2:56:41 PM -07'00'

SCT

with ACS including SCT, should these be changed to ATA?

Status
moverby Rejected 10/20/2008 5:55:20 PM -07'00'
Author: moverby Subject: Sticky Note Date: 10/20/2008 5:55:16 PM -07'00'
This is the name of the SCT function.

Number: 5 Author: Kevin_Marks Subject: Highlight Date: 8/19/2008 2:57:02 PM -07'00'

SCT

with ACS including SCT, should these be changed to ATA?

Status
moverby Accepted 11/3/2008 6:31:19 PM
Author: moverby Subject: Sticky Note Date: 11/3/2008 6:31:16 PM
ATA SCT

Status
moverby Accepted 11/3/2008 6:31:13 PM

Number: 6 Author: LSI-Penokie Subject: Highlight Date: 8/19/2008 6:00:53 PM -07'00'

This note << NOTE 10 - The SATL should >> should be made normative.

Status
moverby Accepted 11/3/2008 6:32:12 PM
Author: moverby Subject: Sticky Note Date: 11/3/2008 6:32:08 PM
Delete entire note. This is covered in detail with bit and byte ordering in ATA and SCSI standards.

Number: 7 Author: Kevin_Marks Subject: Highlight Date: 8/19/2008 2:57:33 PM -07'00'

SCT

with ACS including SCT, should these be changed to ATA?

Status
moverby Accepted 11/3/2008 6:31:27 PM
Author: moverby Subject: Sticky Note Date: 11/3/2008 6:31:24 PM
ATA SCT

Number: 8 Author: LSI-Penokie Subject: Highlight Date: 8/20/2008 10:22:04 AM -07'00'

Change to << READ(6) command, READ(10) command, READ(12) command, and READ(16) command.

Status
moverby Accepted 11/4/2008 2:35:54 PM

Number: 9 Author: Kevin_Marks Subject: Highlight Date: 8/25/2008 8:34:03 AM -07'00'

command, the
s/b
command, then the

Status
moverby Accepted 11/3/2008 6:32:41 PM

Number: 10 Author: Kevin_Marks Subject: Highlight Date: 8/25/2008 8:40:29 AM -07'00'

READ (10), READ (12) or READ (16) command
s/b
READ (10) command, READ (12) command or READ (16) command

Status
moverby Rejected 11/3/2008 6:33:16 PM

Number: 11 Author: LSI-Penokie Subject: Highlight Date: 8/20/2008 10:25:46 AM -07'00'

This should be << the READ (10) command, READ (12) command, or READ (16) command

Status
moverby Accepted 11/3/2008 6:33:11 PM
Author: moverby Subject: Sticky Note Date: 11/3/2008 6:33:08 PM
Rejected for the most part, but keep with commands instead of singular

Number: 12 Author: Kevin_Marks Subject: Highlight Date: 8/25/2008 8:41:18 AM -07'00'

one) the

Comments from page 79 continued on next page

successfully or the disk returns a fatal error other than an unrecoverable read error (e.g., device fault). See 5.4 for a description of error handling for multiple ATA command sequences.

9.2.6 IP bit

If the SATL supports an IP bit value of one and the IP bit is set to one, the SATL shall process the command as follows:

a) If the ATA device supports the SCT LBA Segment Access (see SCT) command and the value of the INITIALIZATION PATTERN LENGTH field in the initialization pattern descriptor is four, and the value of the IP MODIFIER field in the initialization pattern descriptor is zero, then the SATL should send an SCT LBA Segment Access command to the ATA device with the Function Code field set to 0001b (i.,e., Repeat Write Pattern), with the Start field and the Count field set to initialize the area of the media accessible by the application client, and with the Pattern field set to the value of the INITIALIZATION PATTERN field from the FORMAT command initialization pattern descriptor; and
b) if the SCT LBA Segment Access command is not used to write the initialization pattern, then the SATL shall write the specified pattern by issuing ATA write commands (see 3.1.26 and 9.1) to the ATA device.

If the IP bit is set to zero, then the SATL shall return GOOD status.

NOTE 10 - The SATL should reverse the order of the bytes between the Pattern field in the SCT LBA Segment Access command and the value stored in the INITIALIZATION PATTERN field in the FORMAT command initialization pattern descriptor to adjust for the translation from little-endian to big-endian byte ordering.

9.3 READ commands overview

9.3.1 READ commands operation code translation

This subclause applies to the translation of READ(6), READ(10), READ(12), and READ(16) commands.

The SATL shall send ATA read commands (see 3.1.21) in accordance with the constraints specified in 9.1 to cause the ATA device to transfer the logical blocks specified in the SCSI read command (see 3.1.76).

If the SATL returns a CHECK CONDITION status with a sense key set to a value other than ILLEGAL REQUEST while processing the command, the SATL may transfer a vendor-specific amount of data before terminating the command.

9.3.2 READ commands with FUA

If the SATL does not support FUA and the FUA bit is set to one, the SATL shall terminate the READ (10), READ (12) or READ (16) command with CHECK CONDITION status with the sense key set to ILLEGAL REQUEST and the additional sense code set to INVALID FIELD IN CDB.

The SATL shall process a SCSI read command with the FUA bit set to one as follows:

a) If the ATA device supports NCQ (i.e., ATA IDENTIFY DEVICE data word 76 bit 8 is set to one) the SATL shall send a READ FPDMA QUEUED command (see SATA-2.6) with the FUA bit in the Device register set to one;
b) If the ATA device supports the TCQ (see ATA8-ACS) and there are outstanding ATA queued commands, then the SATL shall:
   1) wait until all ATA queued commands have completed;
   2) if the write cache is enabled (ATA8-ACS) on the ATA device, send an ATA verify command (see 3.1.24); and,
   3) send an ATA read command as specified in 9.3.1;

   or
c) If the ATA device supports neither NCQ nor TCQ, or there are no outstanding ATA queued commands, then the SATL shall:
   1) if the write cache is enabled on the ATA device, send an ATA verify command (see 3.1.24); and,
   2) send an ATA read command as specified in 9.3.1.

s/b
one), then the

Status
moverby Accepted 11/3/2008 6:33:20 PM

Number: 13 Author: Kevin_Marks Subject: Inserted Text Date: 8/25/2008 8:45:57 AM -07'00'

(i.e., ATA IDENTIFY DEVICE data word 76 bit 8 is set to one

Status
moverby Rejected 11/3/2008 6:34:10 PM
Author: moverby Subject: Sticky Note Date: 11/3/2008 6:34:06 PM
No inserted text is showing up. Rejected as unknown what was intended.

Number: 14 Author: Kevin_Marks Subject: Highlight Date: 8/25/2008 8:42:00 AM -07'00'

a READ
s/b
an ATA READ

Status
moverby Accepted 11/3/2008 6:34:20 PM

Number: 15 Author: Kevin_Marks Subject: Highlight Date: 8/25/2008 8:42:26 AM -07'00'

FUA bit
s/b
ATA FUA bit

Status
moverby Accepted 11/3/2008 6:34:15 PM

Number: 16 Author: Kevin_Marks Subject: Cross-Out Date: 8/25/2008 8:42:42 AM -07'00'

Status
moverby Accepted 11/3/2008 6:34:28 PM

Number: 17 Author: Kevin_Marks Subject: Highlight Date: 8/25/2008 8:47:45 AM -07'00'

enabled (ATA8-ACS)
s/b
enabled (i.e., ATA IDENTIFY DEVICE data word 85 bit 5 is set to one)

or at least add see in front of ATA8-ACS

Status
moverby Accepted 11/3/2008 6:34:48 PM
Author: moverby Subject: Sticky Note Date: 11/3/2008 6:34:46 PM
add see

Number: 18 Author: Kevin_Marks Subject: Highlight Date: 8/25/2008 8:43:16 AM -07'00'

device, send
s/b
device, then send

Status
moverby Accepted 11/3/2008 6:34:33 PM

Number: 19 Author: Kevin_Marks Subject: Cross-Out Date: 8/25/2008 8:47:27 AM -07'00'

Status
moverby Accepted 11/3/2008 6:35:05 PM

Number: 20 Author: Kevin_Marks Subject: Cross-Out Date: 8/25/2008 8:49:10 AM -07'00'

Status
moverby Accepted 11/3/2008 6:35:12 PM

Number: 21 Author: Kevin_Marks Subject: Highlight Date: 8/25/2008 8:49:00 AM -07'00'

enabled on
s/b
enabled (i.e., ATA IDENTIFY DEVICE data word 85 bit 5 is set to one) on

Status
moverby Accepted 11/3/2008 6:35:35 PM
Author: moverby Subject: Sticky Note Date: 11/3/2008 6:35:32 PM
rejected in part. add (see ATA8-ACS).

9.4 READ (6) command

The READ (6) command is used to request the device to transfer logical blocks of user data to the application client (see SBC-2). Table 35 shows the translation for fields ~~specified~~ in the READ (6) CDB.

Table 35 — READ (6) CDB field translations

Field	Description or reference
OPERATION CODE	Set to 08h. See 9.3.1
LOGICAL BLOCK ADDRESS	The logical block address shall be used to set the ATA LBA (see 3.1.15) as defined by 9.1. If the SATL implements direct logical block mapping (see 3.1.35), then the SATL shall set the ATA LBA in the ATA read command (see 3.1.21) equal to the value specified in the LOGICAL BLOCK ADDRESS field. Otherwise, the mapping is unspecified (see 3.4.2).
TRANSFER LENGTH [a]	The transfer length shall be used to set the ATA Sector Count (see 3.1.22), as defined by 9.1. If the SATL implements direct logical block mapping (see 3.1.35), then the SATL shall set the ATA Sector Count in the ATA read command (see 3.1.21) equal to the value specified in the TRANSFER LENGTH field. Otherwise, the mapping is unspecified (see 3.4.2).
CONTROL	6.5

[a] A transfer length of zero specifies to transfer 256 logical blocks to the application client (see SBC-2).

9.5 READ (10) command

The SATL shall process the READ (10) command the same as the READ (6) command (see 9.3.1). with the

Page: 80

Number: 1 Author: HPQ-RElliott Subject: Cross-Out Date: 9/3/2008 9:42:24 AM -07'00'

Delete
specified

for consistency

Status
moverby Accepted 11/3/2008 6:35:49 PM

Number: 2 Author: Kevin_Marks Subject: Highlight Date: 8/25/2008 9:21:49 AM -07'00'

(see SBC-2).
s/b
(see SBC-3).

Status
moverby Accepted 11/3/2008 6:35:52 PM

Number: 3 Author: Kevin_Marks Subject: Highlight Date: 8/25/2008 9:22:48 AM -07'00'

(see SBC-2).
s/b
(see SBC-3).

Status
moverby Accepted 11/3/2008 6:35:56 PM

additional fields in the CDB implemented as described in the table 36 and 9.3.2.

Table 36 — READ (10) CDB field translations

Field	Description or reference
OPERATION CODE	Set to 28h. See 9.3.1 and 9.3.2.
RDPROTECT	Unspecified (see 3.4.2)
DPO	Unspecified (see 3.4.2)
FUA	9.3.2
FUA_NV	The SATL may ignore the FUA_NV bit~~,~~ or the SATL may implement the FUA_NV bit as defined in SBC-2. Note 1 - Some application clients may expect the device server to return CHECK CONDITION status if the FUA-NV bit is set to one and the Extended INQUIRY Data VPD page is not supported.
LOGICAL BLOCK ADDRESS	The logical block address shall be used to set the ATA LBA (see 3.1.15) as defined by 9.1. If the SATL implements direct logical block mapping (see 3.1.35), then the SATL shall set the ATA LBA in the ATA read command (see 3.1.21) equal to the value specified in the LOGICAL BLOCK ADDRESS field. Otherwise, the mapping is unspecified (see 3.4.2).
GROUP NUMBER	Unspecified (see 3.4.2)
TRANSFER LENGTH[a]	The transfer length is used to set the ATA Sector Count (see 3.1.22), as defined by 9.1. If the SATL implements direct logical block mapping (see 3.1.35), then the SATL shall set the ATA Sector Count in the ATA read command (see 3.1.21) equal to the value specified in the TRANSFER LENGTH field. Otherwise, the mapping is unspecified (see 3.4.2). The SATL shall send as many ATA read commands as needed to satisfy the transfer length ~~specified by the READ (10) command.~~
CONTROL	6.5

[a] A transfer length of zero specifies that a data transfer shall not take place.

Page: 81

Number: 1 Author: Kevin_Marks Subject: Cross-Out Date: 8/25/2008 9:24:47 AM -07'00'

Status
moverby Accepted 11/3/2008 6:37:00 PM

Number: 2 Author: Kevin_Marks Subject: Highlight Date: 8/25/2008 9:25:36 AM -07'00'

SBC-2.
s/b
SBC-3.

Status
moverby Accepted 11/3/2008 6:36:53 PM

Number: 3 Author: Kevin_Marks Subject: Highlight Date: 8/25/2008 2:15:31 PM -07'00'

This should be a table note.

Status
moverby Rejected 11/4/2008 10:32:56 AM
Author: moverby Subject: Sticky Note Date: 11/4/2008 10:32:53 AM
Deleted note

Number: 4 Author: LSI-Penokie Subject: Highlight Date: 8/20/2008 9:48:29 AM -07'00'

This note should not be numbered. Change to << Note - Some... >>

Status
moverby Accepted 11/4/2008 10:32:39 AM
Author: moverby Subject: Sticky Note Date: 11/3/2008 6:36:38 PM
Delete note.

Number: 5 Author: HPQ-RElliott Subject: Cross-Out Date: 9/3/2008 9:42:24 AM -07'00'

Delete:
specified by the READ (10) command.

so other command descriptions can refer to this field

Status
moverby Accepted 11/3/2008 6:37:19 PM

9.6 READ (12) command

The SATL shall process the READ (12) command the same as the READ (10) command (see 9.3.1), with the fields in the CDB implemented as described in table 37 and 9.3.2.

Table 37 — READ (12) CDB field translations

Field	Description or reference
OPERATION CODE	Set to A8h. See 9.3.1 and 9.3.2.
RDPROTECT	Unspecified (see 3.4.2)
DPO	Unspecified (see 3.4.2)
FUA	9.3.2
FUA_NV	The SATL may ignore the FUA_NV bit, or the SATL may implement the FUA_NV bit as defined in SBC-2. Note 1 - Some application clients may expect the device server to return CHECK CONDITION status if the FUA-NV bit is set to one and the Extended INQUIRY Data VPD page is not supported.
LOGICAL BLOCK ADDRESS	The logical block address shall be used to set the ATA LBA (see 3.1.15) as defined by 9.1. If the SATL implements direct logical block mapping (see 3.1.35), then the SATL shall set the ATA LBA in the ATA read command (see 3.1.21) equal to the value specified in the LOGICAL BLOCK ADDRESS field. Otherwise, the mapping is unspecified (see 3.4.2).
GROUP NUMBER	Unspecified (see 3.4.2)
TRANSFER LENGTH[a]	The transfer length is used to set the ATA Sector Count (see 3.1.22), as defined by 9.1. If the SATL implements direct logical block mapping (see 3.1.35), then the SATL shall set the ATA Sector Count in the ATA read command (see 3.1.21) equal to the value specified in the TRANSFER LENGTH field. Otherwise, the mapping is unspecified (see 3.4.2). The SATL shall send as many ATA read commands as needed to satisfy the transfer length specified by the READ (12) command.
CONTROL	6.5

[a] A transfer length of zero specifies that a data transfer shall not take place.

Page: 82

Number: 1 Author: Kevin_Marks Subject: Highlight Date: 8/25/2008 9:28:48 AM -07'00'

SBC-2.
s/b
SBC-3.

Status
moverby Accepted 11/3/2008 6:37:31 PM

Number: 2 Author: Kevin_Marks Subject: Highlight Date: 8/25/2008 2:16:00 PM -07'00'

This should be a table note.

Status
moverby Rejected 11/3/2008 6:40:06 PM
Author: moverby Subject: Sticky Note Date: 11/3/2008 6:40:03 PM

Rejected in favor of Rob Elliott comment to collapse fields to point to first READ command.

Number: 3 Author: LSI-Penokie Subject: Highlight Date: 8/20/2008 9:49:05 AM -07'00'

This note should not be numbered. Change to << Note - Some... >>

Status
moverby Rejected 11/3/2008 6:39:33 PM
Author: moverby Subject: Sticky Note Date: 11/3/2008 6:39:28 PM

Rejected in favor of Rob Elliott comment to collapse fields.

Number: 4 Author: HPQ-RElliott Subject: Note Date: 9/3/2008 9:42:24 AM -07'00'

Replace RDPROTECT, DPO, FUA, FUA_NV, LOGICAL BLOCK ADDRESS, GROUP NUMBER, and TRANSFER LENGTH descriptions with:
As defined in READ (10) (see 9.5)

Status
moverby Accepted 11/3/2008 6:37:50 PM

9.7 READ (16) command

The SATL shall process the READ (16) command the same as the READ (10) command (see 9.3.1), with the fields in the CDB implemented as described in table 38 and 9.3.2.

Table 38 — READ (16) CDB field translations

Field	Description or reference
OPERATION CODE	Set to 88h. See 9.3.1 and 9.3.2.
RDPROTECT	Unspecified (see 3.4.2)
DPO	Unspecified (see 3.4.2)
FUA	9.3.2
FUA_NV	The SATL may ignore the FUA_NV bit, or the SATL may implement the FUA_NV bit as defined in SBC-2. Note 1 - Some application clients may expect the device server to return CHECK CONDITION status if the FUA-NV bit is set to one and the Extended INQUIRY Data VPD page is not supported.
LOGICAL BLOCK ADDRESS	The logical block address shall be used to set the ATA LBA (see 3.1.15) as defined by 9.1. If the SATL implements direct logical block mapping (see 3.1.35), then the SATL shall set the ATA LBA in the ATA read command (see 3.1.21) equal to the value specified in the LOGICAL BLOCK ADDRESS field. Otherwise, the mapping is unspecified (see 3.4.2).
GROUP NUMBER	Unspecified (see 3.4.2)
TRANSFER LENGTH[a]	The transfer length is used to set the ATA Sector Count (see 3.1.22), as defined by 9.1. If the SATL implements direct logical block mapping (see 3.1.35), then the SATL shall set the ATA Sector Count in the ATA read command (see 3.1.21) equal to the value specified in the TRANSFER LENGTH field. Otherwise, the mapping is unspecified (see 3.4.2). The SATL shall send as many ATA read commands as needed to satisfy the transfer length specified by the READ (16) command.
CONTROL	6.5

[a] A transfer length of zero specifies that a data transfer shall not take place.

Page: 83

Number: 1 Author: Kevin_Marks Subject: Highlight Date: 8/25/2008 9:30:05 AM -07'00'

SBC-2.
s/b
SBC-3.

Status
moverby Accepted 11/3/2008 6:38:01 PM

Number: 2 Author: Kevin_Marks Subject: Highlight Date: 8/25/2008 2:16:21 PM -07'00'

This should be a table note.

Status
moverby Rejected 11/3/2008 6:38:48 PM
Author: moverby Subject: Sticky Note Date: 11/3/2008 6:38:44 PM

Rejected in favor of Rob Elliott comment.

Number: 3 Author: LSI-Penokie Subject: Highlight Date: 8/20/2008 9:49:28 AM -07'00'

This note should not be numbered. Change to << Note - Some... >>

Status
moverby Rejected 11/3/2008 6:38:32 PM
Author: moverby Subject: Sticky Note Date: 11/3/2008 6:38:27 PM

Rejected in favor of Rob Elliott comment.

Number: 4 Author: HPQ-RElliott Subject: Note Date: 9/3/2008 9:42:24 AM -07'00'

Replace RDPROTECT, DPO, FUA, FUA_NV, LOGICAL BLOCK ADDRESS, GROUP NUMBER, and TRANSFER LENGTH descriptions with:
As defined in READ (10) (see 9.5)

Status
moverby Accepted 11/3/2008 6:38:52 PM

9.8 READ CAPACITY (10) command

9.8.1 READ CAPACITY (10) command overview

The READ CAPACITY (10) command (see SBC-2) requests that the device server transfer eight bytes of parameter data describing the capacity and medium format of the direct-access block device to the application client. Table 39 shows the translation for fields ~~specified~~ in the READ CAPACITY (10) CDB.

Table 39 — READ CAPACITY (10) CDB field translations

Field	Description or reference
OPERATION CODE	Set to 25h. The SATL shall use ATA IDENTIFY DEVICE data to compute the ATA device's maximum user addressable medium capacity of the ATA device.
LOGICAL BLOCK ADDRESS	If the LOGICAL BLOCK ADDRESS field is not set to zero the SATL shall terminate the command with CHECK CONDITION status with the sense key set to ILLEGAL REQUEST and the additional sense code set to INVALID FIELD IN CDB.
PMI	If the PMI bit is not set to zero the SATL shall terminate the command with CHECK CONDITION status with the sense key set to ILLEGAL REQUEST and the additional sense code set to INVALID FIELD IN CDB.
CONTROL	6.5

9.8.2 READ CAPACITY (10) parameter data

The SATL shall return READ CAPACITY (10) parameter data as defined by SBC-2. Table 40 describes the translation of fields in the READ CAPACITY (10) parameter data.

Table 40 — READ CAPACITY (10) parameter data

Field	Description or reference
RETURNED LOGICAL BLOCK ADDRESS[a]	If the SATL implements direct logical block mapping (see 3.1.35), this field shall contain the lower of: a) the ATA maximum LBA (see 3.1.17); or b) FFFF_FFFFh. If the SATL implements indirect logical block mapping, this field is unspecified (see 3.4.2).
LOGICAL BLOCK LENGTH IN BYTES[a]	If the SATL implements direct logical block mapping (see 3.1.35) then this field shall contain the ATA logical sector size (see 3.1.16). Otherwise this field is unspecified (see 3.4.2).

[a] The values reported in the RETURNED LOGICAL BLOCK ADDRESS field and the LOGICAL BLOCK LENGTH IN BYTES field shall be such that the logical unit capacity (see 3.1.50) is less than or equal to the ATA device capacity (see 3.1.10).

Page: 84

Number: 1 Author: STX-Hatfield Subject: Highlight Date: 8/12/2008 1:22:10 PM -07'00'

SBC-2
s/b
SBC-3

Status
moverby Accepted 11/3/2008 8:05:46 PM

Number: 2 Author: HPQ-RElliott Subject: Cross-Out Date: 9/3/2008 9:42:24 AM -07'00'

Delete
specified

for consistency

Status
moverby Accepted 11/3/2008 8:06:12 PM

9.9 READ CAPACITY (16) command

9.9.1 READ CAPACITY (16) command overview

The READ CAPACITY (16) command (see SBC-2) requests that the device server transfer parameter data describing the capacity and medium format of the direct-access block device to the application client. Table 41 shows the translation for fields ~~specified~~ in the READ CAPACITY (16) CDB.

Table 41 — READ CAPACITY(16) CDB field translations

Field	Description or reference
OPERATION CODE / SERVICE ACTION	Set to 9Eh/10h.
LOGICAL BLOCK ADDRESS	As defined in READ CAPACITY (10) (see 9.8).
ALLOCATION LENGTH	Unspecified (see 3.4.2)
PMI	As defined in READ CAPACITY (10) (see 9.8).
CONTROL	6.5

9.9.2 READ CAPACITY (16) parameter data

The SATL shall return READ CAPACITY (16) parameter data as defined by SBC-2. Table 42 describes the translation of fields in the READ CAPACITY (16) parameter data.

Table 42 — READ CAPACITY (16) parameter data

Field	Description or reference
RETURNED LOGICAL BLOCK ADDRESS[a]	If the SATL implements direct logical block mapping (see 3.1.35), this field shall contain the ATA maximum LBA (see 3.1.17). If the SATL implements indirect logical block mapping, this field is unspecified (see 3.4.2).
LOGICAL BLOCK LENGTH IN BYTES[a]	As defined in READ CAPACITY (10) (see 9.8).
~~RTO_EN~~	~~Unspecified (see 3.4.2)~~
PROT_EN	Unspecified (see 3.4.2)
P_TYPE	Unspecified (see 3.4.2)
LOGICAL BLOCKS PER PHYSICAL BLOCK EXPONENT	If the SATL implements direct logical block mapping (see 3.1.35) then this field shall contain the ATA logical sectors per physical sector exponent (see 5.7). If the SATL implements indirect logical block mapping (see 3.1.39) this field is unspecified (see 3.4.2).
LOWEST ALIGNED LOGICAL BLOCK ADDRESS	If the SATL implements direct logical block mapping and the ATA logical sector alignment is zero, then this field shall be set to zero. In all other cases, this field shall contain the ATA logical sector alignment subtracted from the ATA logical sectors per physical sector (see 5.7). If the SATL implements indirect logical block mapping this field is unspecified.

[a] The values reported in the RETURNED LOGICAL BLOCK ADDRESS field and the BLOCK LENGTH IN BYTES field shall be such that the logical unit capacity (see 3.1.50) is less than or equal to the ATA device capacity (see 3.1.10).

Page: 85

Number: 1 Author: Kevin_Marks Subject: Highlight Date: 8/25/2008 11:47:32 AM -07'00'

(see SBC-2)
s/b
(see SBC-3)

Status
moverby Accepted 11/3/2008 11:28:51 PM

Number: 2 Author: HPQ-RElliott Subject: Cross-Out Date: 9/3/2008 9:42:24 AM -07'00'

Delete
specified

for consistency

Status
moverby Accepted 11/3/2008 11:28:55 PM

Number: 3 Author: Kevin_Marks Subject: Highlight Date: 8/25/2008 11:52:29 AM -07'00'

SBC-2.
s/b
SBC-3.

Status
moverby Accepted 11/3/2008 11:29:02 PM

Number: 4 Author: HPQ-RElliott Subject: Cross-Out Date: 9/3/2008 9:42:24 AM -07'00'

Delete

RTO_EN Unspecified (see 3.4.2)

It was merged into P_TYPE

Status
moverby Accepted 11/3/2008 11:29:07 PM

Number: 5 Author: Kevin_Marks Subject: Cross-Out Date: 8/25/2008 11:51:41 AM -07'00'

Combined in P_TYPE field in SBC-3

Status
moverby Accepted 11/3/2008 11:29:11 PM

Number: 6 Author: STX-Hatfield Subject: Highlight Date: 8/14/2008 3:16:29 PM -07'00'

RTO_EN
---
this was obsoleted by SBC-3

Please remove this row.

Status
moverby Accepted 11/3/2008 11:29:15 PM

Number: 7 Author: Kevin_Marks Subject: Highlight Date: 8/25/2008 11:54:24 AM -07'00'

this
s/b
, then this

Status
moverby Accepted 11/3/2008 11:29:24 PM

Number: 8 Author: LSI-Penokie Subject: Highlight Date: 8/20/2008 9:52:06 AM -07'00'

Change this to << Otherwise, this >>

Status
moverby Accepted 11/3/2008 11:29:32 PM

Number: 9 Author: Kevin_Marks Subject: Highlight Date: 8/25/2008 11:54:52 AM -07'00'

this
s/b
, then this

Status
moverby Accepted 11/3/2008 11:29:38 PM

9.10 REASSIGN BLOCKS command

9.10.1 REASSIGN BLOCKS command overview

The REASSIGN BLOCKS command requests that the SATL reassign defective logical blocks (see SBC-2). ATA devices do not support or have a direct translation for the REASSIGN BLOCKS command. The SATL shall emulate the REASSIGN BLOCKS command as defined in table 43.

Table 43 — REASSIGN BLOCKS CDB field translations

Field	Description or reference
OPERATION CODE	Set to 07h. See 9.10.2.
LONGLBA	See SBC-2
LONGLIST	See SBC-2
CONTROL	6.5

The REASSIGN BLOCKS command parameter list transferred from the application client contains the LBAs of logical blocks to be reassigned.

If the SATL implements direct logical block mapping (see 9.1.2), then the values set by the SATL in the ATA LBA of the ATA verify command(s) and ATA write command(s) shall equal the value(s) of the LBAs in the parameter list. Otherwise, the mapping is unspecified (see 3.4.2).

The SATL shall support the LONGLBA bit and the LONGLIST bit (see SBC-2).

9.10.2 REASSIGN BLOCKS operation code

The SATL shall accept a parameter list specifying LBAs of logical blocks to be reassigned (see SBC-2).

Page: 86

Number: 1 Author: Kevin_Marks Subject: Highlight Date: 8/25/2008 12:02:51 PM -07'00'

(see SBC-2).
s/b
(see SBC-3).

Status
moverby Accepted 11/3/2008 8:06:19 PM

Number: 2 Author: HPQ-RElliott Subject: Highlight Date: 9/9/2008 1:05:18 PM -07'00'

The SATL shall emulate the REASSIGN BLOCKS command as defined in table 43.

s/b
Table 43 shows the translation for fields in the REASSIGN BLOCKS CDB.

for consistency. Although this table has no literal translations, it also has no information about emulation.

Status
moverby Accepted 9/9/2008 1:05:02 PM -07'00'

Number: 3 Author: Kevin_Marks Subject: Highlight Date: 8/25/2008 12:03:20 PM -07'00'

See SBC-2
s/b
See SBC-3

Status
moverby Accepted 11/3/2008 8:06:23 PM

Number: 4 Author: Kevin_Marks Subject: Highlight Date: 8/25/2008 12:03:33 PM -07'00'

See SBC-2
s/b
See SBC-3

Status
moverby Accepted 11/3/2008 8:06:26 PM

Number: 5 Author: Kevin_Marks Subject: Highlight Date: 8/25/2008 12:04:14 PM -07'00'

(see SBC-2).
s/b
(see SBC-3).

Status
moverby Accepted 11/3/2008 8:06:29 PM

Number: 6 Author: Kevin_Marks Subject: Highlight Date: 8/25/2008 12:04:26 PM -07'00'

(see SBC-2).
s/b
(see SBC-3).

Status
moverby Accepted 11/3/2008 8:06:33 PM

The SATL shall process each ATA LBA corresponding to LBAs specified in the parameter list as shown in figure 8.

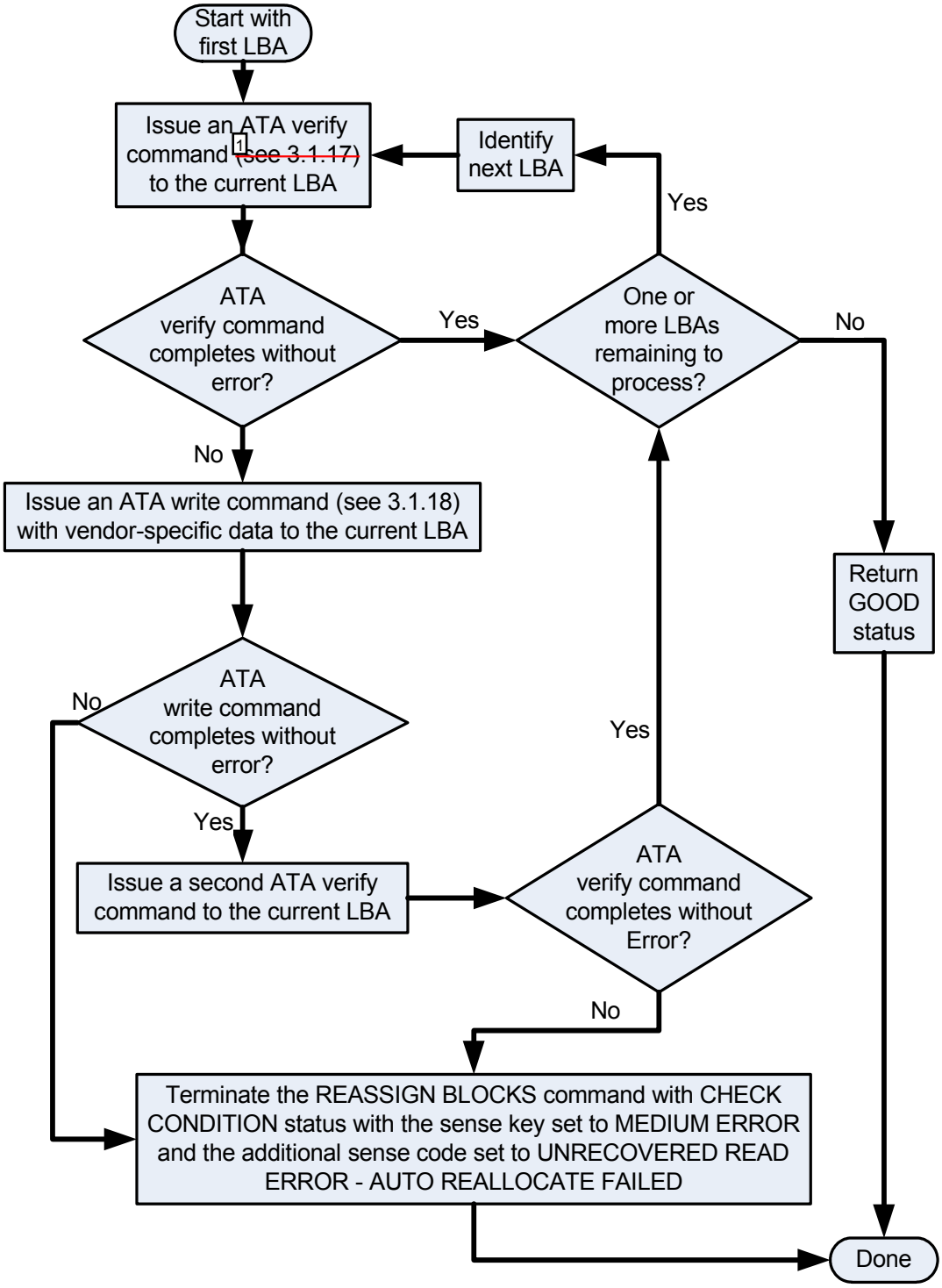

Figure 8 — REASSIGN BLOCKS command translation

Page: 87

Number: 1 Author: HPQ-RElliott Subject: Cross-Out Date: 9/3/2008 9:42:24 AM -07'00'

(see 3.1.17)

Cannot create active cross references to Frame sections inside Visio figures, so better to leave these out.

Status

moverby Accepted 11/3/2008 8:06:44 PM

9.11 START STOP UNIT command

9.11.1 START STOP UNIT command overview

The START STOP UNIT command provides a method for controlling the power state of a logical unit.

If a SATL receives a command that requires medium access while the device is in the Stopped state (see SBC-2), then the SATL shall return CHECK CONDITION status, with the sense key set to NOT READY and the additional sense code set to LOGICAL UNIT NOT READY, INITIALIZING COMMAND REQUIRED.

The POWER CONDITION field is used to specify that the logical unit be placed into a specific power condition or to adjust a timer as defined in table 44. If the POWER CONDITION field contains a value other than 0h, then the SATL shall not consider the ATA device to be in the stopped state (see 8.12.2). If this field is not supported and is set to a value other than 0h, then the SATL shall terminate the command with CHECK CONDITION status, with the sense key set to ILLEGAL REQUEST and the additional sense code set to INVALID FIELD IN CDB.

Table 44 shows the translation for fields ~~specified~~ in the START STOP UNIT CDB.

Table 44 — START/STOP UNIT CDB field translations

Field	Description or reference
OPERATION CODE	Set to 1Bh. See 9.11.2 and 9.11.3.
IMMED	The SATL shall implement this field as defined in 9.11.2 and 9.11.3.
POWER CONDITION	See table 45.
LOEJ	The SATL shall implement this field as defined in 9.11.3.
START	The SATL shall implement this field as defined in 9.11.3.
POWER CONDITION MODIFIER	See table 45 with the POWER CONDITION field set to 02h.
NOFLUSH	See 9.11.4
CONTROL	6.5

Page: 88

Number: 1 Author: Kevin_Marks Subject: Highlight Date: 8/25/2008 12:18:28 PM -07'00'

(see SBC-2)
s/b
(see SBC-3)

Status
moverby Accepted 11/3/2008 8:06:51 PM

Number: 2 Author: HPQ-RElliott Subject: Cross-Out Date: 9/3/2008 9:42:24 AM -07'00'

Delete
specified

for consistency

Status
moverby Accepted 11/3/2008 8:06:54 PM

Number: 3 Author: HPQ-RElliott Subject: Note Date: 9/3/2008 9:42:24 AM -07'00'

To match the order in SBC-3:
Move POWER CONDITION MODIFIER after IMMED
Move NO_FLUSH after POWER CONDITION

Status
moverby Accepted 11/3/2008 8:13:40 PM

Number: 4 Author: HPQ-RElliott Subject: Highlight Date: 9/3/2008 9:42:24 AM -07'00'

(global)

NOFLUSH
s/b
NO_FLUSH

to match SBC-3

Status
moverby Accepted 11/3/2008 8:13:47 PM

Table 45 describes the translations for the POWER CONDITION field of the START STOP UNIT CDB.

Page: 89

Number: 1 Author: Kevin_Marks Subject: Sticky Note Date: 8/25/2008 12:26:41 PM -07'00'

Remove white space before table 45.

Status

moverby Accepted 11/3/2008 8:13:58 PM

Table 45 — POWER CONDITION translation

POWER CONDITION	Description or Reference
00h - START_VALID	The SATL shall process the LOEJ and START fields as defined in 9.11.3.
01h - ACTIVE	The SATL shall: 1) If the IMMED bit is set to one, then return GOOD status; 2) send an ATA verify command (see 3.1.24) to the ATA device with the ATA Sector Count set to one and the LBA set to a value between zero and the maximum LBA supported by the ATA device in its current configuration; 3) If the ATA verify command completes with any error, then process ending status according to the IMMED bit (see 9.11.2) with the additional sense code set to COMMAND SEQUENCE ERROR; 4) If the ATA verify command completes without error and the IMMED bit is set to zero, then return GOOD status (see 9.11.2) and the SATL shall no longer consider the ATA device to be in the stopped power state.
02h - IDLE	The SATL shall: 1) If the IMMED bit is set to one, then return GOOD status; 2) If the NOFLUSH bit is set to zero, then send an ATA flush command (see 3.1.12) to the ATA device; 3) If the ATA flush command completes with any error, then process ending status according to the IMMED bit (see 9.11.2) with the additional sense code set to COMMAND SEQUENCE ERROR; 4) If the ATA flush command was sent (step 2) and completes without error, then: A) If the POWER CONDITION MODIFIER field is set to zero, then send an ATA IDLE IMMEDIATE command to the ATA device with the ATA Feature field set to zero, the ATA Count field set to zero, and the ATA LBA field set to zero. B) If the POWER CONDITION MODIFIER field is set to one, then send an ATA IDLE IMMEDIATE command to the ATA device with the ATA Feature field set to 44h, the ATA Count field set to zero, and the ATA LBA field set to 55_4E4Ch. 5) If the ATA IDLE IMMEDIATE command completes with any error, then process ending status according to the IMMED bit (see 9.11.2) with the additional sense code set to COMMAND SEQUENCE ERROR; and 6) If the ATA IDLE IMMEDIATE command completes without error and the IMMED bit is set to zero, then return GOOD status ~~(see 9.11.2).~~

Page: 90

Number: 1 Author: HPQ-RElliott Subject: Highlight Date: 9/3/2008 9:42:24 AM -07'00'

Translation
s/b
field translation

Status
moverby Accepted 11/3/2008 8:14:46 PM

Number: 2 Author: LSI-Penokie Subject: Highlight Date: 8/20/2008 10:10:17 AM -07'00'

Table 45 title should have << (part 1 of x) at the end of the title.

Status
moverby Accepted 11/3/2008 8:14:11 PM

Number: 3 Author: HPQ-RElliott Subject: Note Date: 9/3/2008 9:42:24 AM -07'00'

Make table 45 Descriptor column wider so it doesn't take as much space.

Add (part 1 of 2) to table title if it continues to wrap

Adjust formatting so there is not a page of white space above the table

Status
moverby Accepted 11/3/2008 8:14:43 PM

Number: 4 Author: HPQ-RElliott Subject: Highlight Date: 9/3/2008 9:42:24 AM -07'00'

POWER CONDITION
s/b
Code

Status
moverby Accepted 11/3/2008 8:14:50 PM

Number: 5 Author: HPQ-RElliott Subject: Highlight Date: 9/3/2008 9:42:24 AM -07'00'

0
s/b
00h

to match other entries

Status
moverby Accepted 11/3/2008 8:15:06 PM

Number: 6 Author: HPQ-RElliott Subject: Highlight Date: 9/3/2008 9:42:24 AM -07'00'

00h - START_VALID
s/b
00h (i.e., START_VALID)

Use uppercase, not smallcaps.

Make similar change in other rows in table 45

Status
moverby Accepted 11/3/2008 8:15:01 PM

Number: 7 Author: Kevin_Marks Subject: Highlight Date: 8/25/2008 1:15:48 PM -07'00'

Should not be small CAPS

Status
moverby Accepted 11/3/2008 8:14:57 PM

Number: 8 Author: Kevin_Marks Subject: Highlight Date: 8/25/2008 1:00:08 PM -07'00'

send
s/b
Send

Status
moverby Accepted 11/3/2008 8:15:10 PM

Number: 9 Author: LSI-Penokie Subject: Sticky Note Date: 8/20/2008 10:02:26 AM -07'00'

In table 45 the 1st column should be subdivided into code and name columns. The code column would contain the number (e.g., 01h) and the name column would contain the name (e.g., active). Also the names are not in small caps but should be just caps.

Status
moverby Accepted 9/9/2008 1:08:32 PM -07'00'

Number: 10 Author: Kevin_Marks Subject: Cross-Out Date: 8/25/2008 1:12:38 PM -07'00'

Status
moverby Accepted 11/3/2008 8:15:18 PM

Number: 11 Author: Kevin_Marks Subject: Highlight Date: 8/25/2008 1:15:59 PM -07'00'

Should not be small CAPS

Status
moverby Accepted 11/3/2008 8:15:30 PM

Number: 12 Author: Kevin_Marks Subject: Highlight Date: 8/25/2008 1:04:50 PM -07'00'

need and/or. Not sure which, because 3) and 4 look like an if/else.

Status
moverby Accepted 11/3/2008 8:15:48 PM

Author: moverby Subject: Sticky Note Date: 11/3/2008 8:15:45 PM

and

Number: 13 Author: LSI-Penokie Subject: Highlight Date: 8/20/2008 10:03:20 AM -07'00'

This should be << ERROR; and >>

Comments from page 90 continued on next page

Table 45 — POWER CONDITION Translation

POWER CONDITION	Description or Reference
0 - START_VALID	The SATL shall process the LOEJ and START fields as defined in 9.11.3.
01h - ACTIVE	The SATL shall: 1) If the IMMED bit is set to one, then return GOOD status; 2) send an ATA verify command (see 3.1.24) to the ATA device with the ATA Sector Count set to one and the LBA set to a value between zero and the maximum LBA supported by the ATA device in its current configuration; 3) If the ATA verify command completes with any error, then process ending status according to the IMMED bit (see 9.11.2) with the additional sense code set to COMMAND SEQUENCE ERROR; 4) If the ATA verify command completes without error and the IMMED bit is set to zero, then return GOOD status (see 9.11.2) and the SATL shall no longer consider the ATA device to be in the stopped power state.
02h - IDLE	The SATL shall: 1) If the IMMED bit is set to one, then return GOOD status; 2) If the NOFLUSH bit is set to zero, then send an ATA flush command (see 3.1.12) to the ATA device; 3) If the ATA flush command completes with any error, then process ending status according to the IMMED bit (see 9.11.2) with the additional sense code set to COMMAND SEQUENCE ERROR; 4) If the ATA flush command was sent (step 2) and completes without error, then: A) If the POWER CONDITION MODIFIER field is set to zero, then send an ATA IDLE IMMEDIATE command to the ATA device with the ATA Feature field set to zero, the ATA Count field set to zero, and the ATA LBA field set to zero. B) If the POWER CONDITION MODIFIER field is set to one, then send an ATA IDLE IMMEDIATE command to the ATA device with the ATA Feature field set to 44h, the ATA Count field set to zero, and the ATA LBA field set to 55_4E4Ch. 5) If the ATA IDLE IMMEDIATE command completes with any error, then process ending status according to the IMMED bit (see 9.11.2) with the additional sense code set to COMMAND SEQUENCE ERROR; and 6) If the ATA IDLE IMMEDIATE command completes without error and the IMMED bit is set to zero, then return GOOD status ~~(see 9.11.2).~~

Status
moverby Accepted 11/3/2008 8:15:35 PM
Number: 14 Author: HPQ-RElliott Subject: Highlight Date: 9/3/2008 9:42:24 AM -07'00'
stopped power state
s/b
stopped power condition, standby power condition, or idle power condition

since this moves out of any state, not just stopped

Status
moverby Accepted 11/3/2008 8:15:57 PM
Number: 15 Author: Kevin_Marks Subject: Cross-Out Date: 8/25/2008 1:12:52 PM -07'00'

Status
moverby Accepted 11/3/2008 8:19:31 PM
Number: 16 Author: HPQ-RElliott Subject: Highlight Date: 9/3/2008 9:42:24 AM -07'00'
ATA flush command completes
s/b
If the ATA flush command in step 2) completes

Status
moverby Accepted 11/3/2008 8:19:52 PM
Number: 17 Author: moverby Subject: Inserted Text Date: 11/4/2008 2:41:04 PM
was sent and

Status
moverby Accepted 11/4/2008 2:41:21 PM
Number: 18 Author: HPQ-RElliott Subject: Highlight Date: 9/3/2008 9:42:24 AM -07'00'
ATA flush command was sent (step 2) and completes
s/b
If the ATA flush command in step 2) completes

Status
moverby Accepted 11/3/2008 8:20:29 PM
Number: 19 Author: LSI-Penokie Subject: Highlight Date: 8/20/2008 10:07:27 AM -07'00'
This needs a hypertext link to the referenced step.

Status
moverby Accepted 11/4/2008 2:40:41 PM
Author: moverby Subject: Sticky Note Date: 11/3/2008 8:20:13 PM
Rejecting because the link is going to move 3 lines and be undetectable on most screens.

Author: moverby Subject: Sticky Note Date: 11/4/2008 2:40:37 PM
Delete step 2 in parenthetical

Number: 20 Author: HPQ-RElliott Subject: Highlight Date: 9/3/2008 9:42:24 AM -07'00'
zero
s/b
00h

to communicate the field width and better parallel the 44h below

Status
moverby Accepted 11/3/2008 8:20:42 PM
Number: 21 Author: Kevin_Marks Subject: Highlight Date: 8/25/2008 1:16:11 PM -07'00'
Should not be small CAPS

Status
moverby Accepted 11/3/2008 8:20:50 PM
Number: 22 Author: Kevin_Marks Subject: Highlight Date: 8/25/2008 1:19:21 PM -07'00'
zero.
s/b
zero; or

Status
moverby Accepted 11/3/2008 8:21:01 PM
Number: 23 Author: LSI-Penokie Subject: Highlight Date: 8/20/2008 10:08:17 AM -07'00'
This should be << zero; or >>

Status
moverby Accepted 11/3/2008 8:20:54 PM
Number: 24 Author: HPQ-RElliott Subject: Highlight Date: 9/3/2008 9:42:24 AM -07'00'
.
s/b
; or

Status
moverby Accepted 11/3/2008 8:21:04 PM
Number: 25 Author: HPQ-RElliott Subject: Highlight Date: 9/3/2008 9:42:24 AM -07'00'
.
s/b
;

Status
moverby Accepted 11/3/2008 8:21:08 PM
Number: 26 Author: Kevin_Marks Subject: Cross-Out Date: 8/25/2008 1:13:21 PM -07'00'

Status
moverby Accepted 11/3/2008 8:21:12 PM

Comments from page 90 continued on next page

Table 45 — POWER CONDITION Translation

POWER CONDITION	Description or Reference
0 - START_VALID	The SATL shall process the LOEJ and START fields as defined in 9.11.3.
01h - ACTIVE	The SATL shall: 1) If the IMMED bit is set to one, then return GOOD status; 2) send an ATA verify command (see 3.1.24) to the ATA device with the ATA Sector Count set to one and the LBA set to a value between zero and the maximum LBA supported by the ATA device in its current configuration; 3) If the ATA verify command completes with any error, then process ending status according to the IMMED bit (see 9.11.2) with the additional sense code set to COMMAND SEQUENCE ERROR; 4) If the ATA verify command completes without error and the IMMED bit is set to zero, then return GOOD status (see 9.11.2) and the SATL shall no longer consider the ATA device to be in the stopped power state.
02h - IDLE	The SATL shall: 1) If the IMMED bit is set to one, then return GOOD status; 2) If the NOFLUSH bit is set to zero, then send an ATA flush command (see 3.1.12) to the ATA device; 3) If the ATA flush command completes with any error, then process ending status according to the IMMED bit (see 9.11.2) with the additional sense code set to COMMAND SEQUENCE ERROR; 4) If the ATA flush command was sent (step 2) and completes without error, then: A) If the POWER CONDITION MODIFIER field is set to zero, then send an ATA IDLE IMMEDIATE command to the ATA device with the ATA Feature field set to zero, the ATA Count field set to zero, and the ATA LBA field set to zero. B) If the POWER CONDITION MODIFIER field is set to one, then send an ATA IDLE IMMEDIATE command to the ATA device with the ATA Feature field set to 44h, the ATA Count field set to zero, and the ATA LBA field set to 55_4E4Ch. 5) If the ATA IDLE IMMEDIATE command completes with any error, then process ending status according to the IMMED bit (see 9.11.2) with the additional sense code set to COMMAND SEQUENCE ERROR; and 6) If the ATA IDLE IMMEDIATE command completes without error and the IMMED bit is set to zero, then return GOOD status ~~(see 9.11.2).~~

Number: 27 Author: HPQ-RElliott Subject: Highlight Date: 9/3/2008 9:42:24 AM -07'00'

ATA IDLE IMMEDIATE command completes
s/b
ATA IDLE IMMEDIATE command in step 4) completes

Status
moverby Accepted 11/3/2008 8:21:16 PM

Number: 28 Author: HPQ-RElliott Subject: Highlight Date: 9/3/2008 9:42:24 AM -07'00'

ATA IDLE IMMEDIATE command completes
s/b
ATA IDLE IMMEDIATE command in step 4) completes

Status
moverby Accepted 11/3/2008 8:21:19 PM

Number: 29 Author: HPQ-RElliott Subject: Cross-Out Date: 9/3/2008 9:42:24 AM -07'00'

Delete (see 9.11.2)

That section is only for errors; this is a GOOD status entry.

Status
moverby Accepted 11/3/2008 8:21:25 PM

Table 45 — POWER CONDITION Translation

POWER CONDITION	Description or Reference
03 - STANDBY	The SATL shall: 1) If the IMMED bit is set to one, then return GOOD status; 2) If the NOFLUSH bit is set to zero, then send an ATA flush command (see 3.1.11) to the ATA device; 3) If the ATA flush command completes with any error, then process ending status according to the IMMED bit (see 9.11.2) with the additional sense code set to COMMAND SEQUENCE ERROR; 4) If the ATA flush command was sent (step 2) and completes without error, then the SATL shall send an ATA STANDBY IMMEDIATE command to the ATA device; 5) If the ATA STANDBY IMMEDIATE command completes with any error, then process ending status according to the IMMED bit (see 9.11.2) with the additional sense code set to COMMAND SEQUENCE ERROR; and 6) If the ATA STANDBY IMMEDIATE command completes without error and the IMMED bit is set to zero, then return GOOD status (see 9.11.2).
0Bh - FORCE_S_0	The SATL shall: 1) If the IMMED bit is set to one, then return GOOD status; 2) If the NOFLUSH bit is set to zero, then send an ATA flush command (see 3.1.11) to the ATA device; 3) If the ATA flush command completes with any error, then process ending status according to the IMMED bit (see 9.11.2) with the additional sense code set to COMMAND SEQUENCE ERROR; 4) If the ATA flush command was sent (step 2) and completes without error, then the count field shall be set to zero, and the SATL shall send an ATA STANDBY command to the ATA device; 5) If the ATA STANDBY command completes with any error, then process ending status according to the IMMED bit (see 9.11.2) with the additional sense code set to COMMAND SEQUENCE ERROR; and 6) If the ATA STANDBY command completes without error and the IMMED bit is set to zero, then return GOOD status (see 9.11.2).
All other values	The SATL shall terminate the command with CHECK CONDITION status, with the sense key set to ILLEGAL REQUEST and the additional sense code set to INVALID FIELD IN CDB.

9.11.2 Processing ending status if an error occurs

If an error occurs during the processing of the START STOP UNIT command and the IMMED bit is set to zero, then the SATL shall terminate the START STOP UNIT command with CHECK CONDITION status with a sense key set to ABORTED COMMAND, and the additional sense code set to the value specified for the error being reported (see table 46).

If an error occurs during the processing of the START STOP UNIT command and the IMMED bit is set to one, then the SATL shall terminate the START STOP UNIT command and return CHECK CONDITION status as a deferred error (see SPC-3) with a sense key set to ABORTED COMMAND, and the additional sense code set to the value specified for the error being reported (see table 46).

Page: 91

Number: 1 Author: Kevin_Marks Subject: Cross-Out Date: 8/25/2008 1:23:00 PM -07'00'

Status
moverby Accepted 11/3/2008 8:21:35 PM

Number: 2 Author: HPQ-RElliott Subject: Highlight Date: 9/3/2008 9:42:24 AM -07'00'

ATA flush command completes
s/b
ATA flush command in step 2) completes

Status
moverby Accepted 11/3/2008 8:21:42 PM

Number: 3 Author: moverby Subject: Inserted Text Date: 11/4/2008 2:42:11 PM

was sent and

Status
moverby Accepted 11/4/2008 2:42:15 PM

Number: 4 Author: LSI-Penokie Subject: Highlight Date: 8/20/2008 10:11:21 AM -07'00'

This needs a hypertext link to the referenced step.

Status
moverby Accepted 11/4/2008 2:42:34 PM

Author: moverby Subject: Sticky Note Date: 11/3/2008 8:22:03 PM

Rejected as this hyperlink moves 3 lines and will be undetectable by someone clicking on the link.

Author: moverby Subject: Sticky Note Date: 11/4/2008 2:42:31 PM

Delete step 2 parenthetical

Number: 5 Author: HPQ-RElliott Subject: Highlight Date: 9/3/2008 9:42:24 AM -07'00'

ATA flush command was sent (step 2) and completes
s/b
ATA flush command in step 2) completes

Status
moverby Accepted 11/3/2008 8:40:28 PM

Number: 6 Author: HPQ-RElliott Subject: Highlight Date: 9/3/2008 9:42:24 AM -07'00'

03
s/b
03h

Status
moverby Accepted 11/3/2008 8:40:37 PM

Number: 7 Author: Kevin_Marks Subject: Highlight Date: 8/25/2008 1:16:22 PM -07'00'

Should not be small CAPS

Status
moverby Accepted 11/3/2008 8:40:43 PM

Number: 8 Author: HPQ-RElliott Subject: Highlight Date: 9/3/2008 9:42:24 AM -07'00'

ATA STANDBY IMMEDIATE command completes
s/b
ATA STANDBY IMMEDIATE command in step 4) completes

Status
moverby Accepted 11/3/2008 8:40:54 PM

Number: 9 Author: Kevin_Marks Subject: Cross-Out Date: 8/25/2008 1:23:25 PM -07'00'

Status
moverby Accepted 11/3/2008 8:41:03 PM

Number: 10 Author: HPQ-RElliott Subject: Highlight Date: 9/3/2008 9:42:24 AM -07'00'

ATA STANDBY IMMEDIATE command completes
s/b
ATA STANDBY IMMEDIATE command in step 4) completes

Status
moverby Accepted 11/3/2008 8:41:12 PM

Number: 11 Author: HPQ-RElliott Subject: Cross-Out Date: 9/3/2008 9:42:24 AM -07'00'

Delete (see 9.11.2)

since this is for GOOD status

Status
moverby Accepted 11/3/2008 8:41:18 PM

Number: 12 Author: Kevin_Marks Subject: Cross-Out Date: 8/25/2008 1:23:51 PM -07'00'

Status
moverby Accepted 11/3/2008 8:41:24 PM

Number: 13 Author: HPQ-RElliott Subject: Highlight Date: 9/3/2008 9:42:24 AM -07'00'

ATA flush command completes
s/b
ATA flush command in step 2) completes

Status

Comments from page 91 continued on next page

Table 45 — POWER CONDITION Translation

POWER CONDITION	Description or Reference
03 - STANDBY	The SATL shall: 1) If the IMMED bit is set to one, then return GOOD status; 2) If the NOFLUSH bit is set to zero, then send an ATA flush command (see 3.1.11) to the ATA device; 3) If the ATA flush command completes with any error, then process ending status according to the IMMED bit (see 9.11.2) with the additional sense code set to COMMAND SEQUENCE ERROR; 4) If the ATA flush command was sent (step 2) and completes without error, then the SATL shall send an ATA STANDBY IMMEDIATE command to the ATA device; 5) If the ATA STANDBY IMMEDIATE command completes with any error, then process ending status according to the IMMED bit (see 9.11.2) with the additional sense code set to COMMAND SEQUENCE ERROR; and 6) If the ATA STANDBY IMMEDIATE command completes without error and the IMMED bit is set to zero, then return GOOD status (see 9.11.2).
0Bh [18] [19] FORCE_S_0	The SATL shall: 1) If the IMMED bit is set to one, then return GOOD status; 2) If the NOFLUSH bit is set to zero, then send an ATA flush command (see 3.1.11) to the ATA device; 3) If the ATA flush command [14] completes with any error, then process ending status according to the IMMED bit (see 9.11.2) with the additional sense code set to COMMAND SEQUENCE ERROR; 4) [15] If the [17] ATA flush command was sent [16] (step 2) and completes without error, then the count field shall be set to zero, and the SATL shall send an ATA STANDBY command to the ATA device; 5) If the [21] ATA STANDBY command completes with any [20] error, then process ending status according to the IMMED bit (see 9.11.2) with the additional sense code set to COMMAND SEQUENCE ERROR; and 6) If the [22] ATA STANDBY command completes without error and the IMMED bit is set to zero, then return GOOD status [23] (see 9.11.2).
All other values	The SATL shall terminate the command with CHECK CONDITION status, with the sense key set to ILLEGAL REQUEST and the additional sense code set to INVALID FIELD IN CDB.

9.11.2 Processing ending status if an error occurs

If an error occurs during the processing of the START STOP UNIT command and the IMMED bit is set to zero, then the SATL shall terminate the START STOP UNIT command with CHECK CONDITION status with a sense key set to ABORTED COMMAND, and the additional sense code set to the value specified for the error being reported (see table 46).

If an error occurs during the processing of the START STOP UNIT command and the IMMED bit is set to one, then the SATL shall terminate the START STOP UNIT command and return CHECK CONDITION status as a deferred error [24] (see SPC-3) with a sense key set to ABORTED COMMAND, and the additional sense code set to the value specified for the error being reported (see table 46).

moverby Accepted 11/3/2008 8:41:27 PM

Number: 14 Author: moverby Subject: Inserted Text Date: 11/4/2008 2:43:01 PM

was sent and

Status

moverby Accepted 11/4/2008 2:43:04 PM

Number: 15 Author: Kevin_Marks Subject: Highlight Date: 8/25/2008 1:26:46 PM -07'00'

If the ATA flush command was sent (step 2) and completes without error, then the count field shall be set to zero, and the SATL shall send an ATA STANDBY command to the ATA device;

s/b

If the ATA flush command was sent (step 2) and completes without error, then the SATL shall send an ATA STANDBY command to the ATA device with the count field shall be set to zero;

Status

moverby Accepted 11/3/2008 8:42:45 PM

Author: moverby Subject: Sticky Note Date: 11/3/2008 8:42:41 PM

If the ATA flush command was sent (step 2) and completes without error, then the SATL shall send an ATA STANDBY command to the ATA device with the count field set to zero

Number: 16 Author: LSI-Penokie Subject: Highlight Date: 8/20/2008 10:11:53 AM -07'00'

This needs a hypertext link to the referenced step.

Status

moverby Accepted 11/4/2008 2:43:21 PM

Author: moverby Subject: Sticky Note Date: 11/3/2008 8:41:51 PM

Rejected as this hyperlink would not have any useful movement in the document.

Author: moverby Subject: Sticky Note Date: 11/4/2008 2:43:17 PM

Delete step 2 in parenthetical

Number: 17 Author: HPQ-RElliott Subject: Highlight Date: 9/3/2008 9:42:24 AM -07'00'

ATA flush command was sent (step 2) and completes

s/b

ATA flush command in step 2) completes

Status

moverby Rejected 11/3/2008 8:43:15 PM

Author: moverby Subject: Sticky Note Date: 11/3/2008 8:43:11 PM

Rejected in favor of Kevin Mark's rewrite.

Number: 18 Author: HPQ-RElliott Subject: Highlight Date: 9/3/2008 9:42:24 AM -07'00'

FORCE_S_0

s/b

FORCE_STANDBY_0

Status

moverby Accepted 11/3/2008 8:43:23 PM

Number: 19 Author: Kevin_Marks Subject: Highlight Date: 8/25/2008 1:16:46 PM -07'00'

Should not be small CAPS

Status

moverby Accepted 11/3/2008 8:43:35 PM

Number: 20 Author: Kevin_Marks Subject: Cross-Out Date: 8/25/2008 1:27:28 PM -07'00'

Status

moverby Accepted 11/3/2008 8:43:40 PM

Number: 21 Author: HPQ-RElliott Subject: Highlight Date: 9/3/2008 9:42:24 AM -07'00'

ATA STANDBY command completes

s/b

ATA STANDBY command in step 4) completes

Status

moverby Accepted 11/3/2008 8:43:44 PM

Number: 22 Author: HPQ-RElliott Subject: Highlight Date: 9/3/2008 9:42:24 AM -07'00'

ATA STANDBY command completes

s/b

ATA STANDBY command in step 4) completes

Status

moverby Accepted 11/3/2008 8:43:48 PM

Number: 23 Author: HPQ-RElliott Subject: Cross-Out Date: 9/3/2008 9:42:24 AM -07'00'

Delete (see 9.11.2)

since this is for GOOD status

Status

moverby Accepted 11/3/2008 8:43:53 PM

Number: 24 Author: Kevin_Marks Subject: Highlight Date: 8/25/2008 1:28:40 PM -07'00'

(see SPC-3)

s/b

(see SPC-4)

Status

moverby Accepted 11/3/2008 8:43:58 PM

Comments from page 91 continued on next page

9.11.3 START STOP UNIT START bit LOEJ bit combinations

The SATL shall perform the actions shown in table 46 in response to a START STOP UNIT command when the POWER CONDITION field is set to zero.

Table 46 — Definition of START and LOEJ bits in the START STOP UNIT CDB

START	LOEJ	Definition
0	0	The SATL shall: 1) If the IMMED bit is set to one, then return GOOD status; 2) Send an ATA flush command (see 3.1.12) to the ATA device; 3) If the ATA flush command completes with any error, then process ending status according to the IMMED bit (see 9.11.2) with the additional sense code set to COMMAND SEQUENCE ERROR; 4) If the ATA flush command completes without error, then send an ATA STANDBY IMMEDIATE command to the ATA device with the Count field set to zero; 5) If the ATA STANDBY IMMEDIATE command completes with any error, then process ending status according to the IMMED bit (see 9.11.2) with the additional sense code set to COMMAND SEQUENCE ERROR; and 6) If the ATA STANDBY IMMEDIATE command completes without error and the IMMED bit is set to zero, then return GOOD status (see 9.11.2) [a].
0	1	If the ATA device supports the Removable Media feature set (see ATA/ATAPI-7), then the SATL shall: 1) If the IMMED bit is set to one, then return GOOD status; 2) Send an ATA MEDIA EJECT command to the ATA device; 3) If the ATA MEDIA EJECT command completes with any error, then process ending status according to the IMMED bit (see 9.11.2) with the additional sense code set to MEDIA LOAD OR EJECT FAILED; and 4) If the MEDIA EJECT command completes without error and the IMMED bit is set to zero, then return GOOD status. If the ATA device does not support the Removable Media feature set, then the SATL shall return CHECK CONDITION status with the sense key set to ILLEGAL REQUEST and the additional sense code set to INVALID FIELD IN CDB.
1	0	The SATL shall: 1) If the IMMED bit is set to one, then return GOOD status; 2) Send an ATA verify command (see 3.1.24) to the ATA device with the Count field set to one and the LBA set to a value between zero and the maximum LBA supported by the ATA device in its current configuration [b]; and 3) If the IMMED bit is set to one, then return GOOD status when command completion is received for the ATA verify command (see 3.1.24) [c].
1	1	The SATL shall return CHECK CONDITION status with the sense key set to ILLEGAL REQUEST, with the additional sense code set to INVALID FIELD IN CDB.

[a] After returning GOOD status for a START STOP UNIT command with the START bit set to zero, the SATL shall consider the ATA device to be in the Stopped power state (see SBC-2).

[b] An ATA device medium access occurs when an LBA is specified whose data is not contained in ATA device's cache memory. If a value in LBA is specified for an ATA verify command where the data is contained in ATA device's cache memory, then an ATA device may not be in the Active power mode (see ATA8-ACS) after completion of the ATA verify command.

[c] After returning GOOD status for a START STOP UNIT command with the START bit set to one, the SATL shall consider the ATA device to be in the Active power state (see SBC-2).

Page: 92

Number: 1 Author: Kevin_Marks Subject: Cross-Out Date: 8/25/2008 1:29:09 PM -07'00'

Status
moverby Accepted 11/3/2008 8:46:09 PM

Number: 2 Author: LSI-Penokie Subject: Highlight Date: 8/20/2008 10:14:03 AM -07'00'

Remove one of the extra periods at the end of this sentence.

Status
moverby Accepted 11/3/2008 8:46:17 PM

Number: 3 Author: HPQ-RElliott Subject: Highlight Date: 9/3/2008 9:42:24 AM -07'00'

..
s/b
.

Status
moverby Accepted 11/3/2008 8:46:14 PM

Number: 4 Author: Kevin_Marks Subject: Cross-Out Date: 8/25/2008 1:30:07 PM -07'00'

Status
moverby Accepted 11/3/2008 8:46:23 PM

Number: 5 Author: HPQ-RElliott Subject: Highlight Date: 9/3/2008 9:42:24 AM -07'00'

ATA flush command completes
s/b
ATA flush command in step 2) completes

Status
moverby Accepted 11/3/2008 8:46:26 PM

Number: 6 Author: HPQ-RElliott Subject: Highlight Date: 9/3/2008 9:42:24 AM -07'00'

ATA flush command completes
s/b
ATA flush command in step 2) completes

Status
moverby Accepted 11/3/2008 8:46:29 PM

Number: 7 Author: Kevin_Marks Subject: Cross-Out Date: 8/25/2008 1:31:12 PM -07'00'

Status
moverby Accepted 11/3/2008 8:46:35 PM

Number: 8 Author: HPQ-RElliott Subject: Highlight Date: 9/3/2008 9:42:24 AM -07'00'

ATA STANDBY IMMEDIATE command completes
s/b
ATA STANDBY IMMEDIATE command in step 4) completes

Status
moverby Accepted 11/3/2008 8:46:39 PM

Number: 9 Author: HPQ-RElliott Subject: Highlight Date: 9/3/2008 9:42:24 AM -07'00'

ATA STANDBY IMMEDIATE command completes
s/b
ATA STANDBY IMMEDIATE command in step 4) completes

Status
moverby Accepted 11/3/2008 8:46:42 PM

Number: 10 Author: Kevin_Marks Subject: Highlight Date: 8/25/2008 1:34:03 PM -07'00'

send
s/b
Send

Status
moverby Accepted 11/3/2008 8:46:46 PM

Number: 11 Author: Kevin_Marks Subject: Cross-Out Date: 8/25/2008 1:34:15 PM -07'00'

Status
moverby Accepted 11/3/2008 8:46:56 PM

Number: 12 Author: HPQ-RElliott Subject: Highlight Date: 9/3/2008 9:42:24 AM -07'00'

ATA MEDIA EJECT command completes
s/b
ATA MEDIA EJECT command in step 2) completes

Status
moverby Accepted 11/3/2008 8:46:59 PM

Number: 13 Author: HPQ-RElliott Subject: Highlight Date: 9/3/2008 9:42:24 AM -07'00'

ATA MEDIA EJECT command completes
s/b
ATA MEDIA EJECT command in step 2) completes

Status
moverby Accepted 11/3/2008 8:47:02 PM

Number: 14 Author: bmartin Subject: Highlight Date: 9/4/2008 12:29:33 AM -07'00'

What is returned if the ATA verify command fails?

Comments from page 92 continued on next page

9.11.3 START STOP UNIT START bit LOEJ bit combinations

The SATL shall perform the actions shown in table 46 in response to a START STOP UNIT command when the POWER CONDITION field is set to zero.

Table 46 — Definition of START and LOEJ bits in the START STOP UNIT CDB

START	LOEJ	Definition
0	0	The SATL shall: 1) If the IMMED bit is set to one, then return GOOD status; 2) Send an ATA flush command (see 3.1.12) to the ATA device; 3) If the ATA flush command completes with any error, then process ending status according to the IMMED bit (see 9.11.2) with the additional sense code set to COMMAND SEQUENCE ERROR; 4) If the ATA flush command completes without error, then send an ATA STANDBY IMMEDIATE command to the ATA device with the Count field set to zero; 5) If the ATA STANDBY IMMEDIATE command completes with any error, then process ending status according to the IMMED bit (see 9.11.2) with the additional sense code set to COMMAND SEQUENCE ERROR; and 6) If the ATA STANDBY IMMEDIATE command completes without error and the IMMED bit is set to zero, then return GOOD status (see 9.11.2) [a].
0	1	If the ATA device supports the Removable Media feature set (see ATA/ATAPI-7), then the SATL shall: 1) If the IMMED bit is set to one, then return GOOD status; 2) send an ATA MEDIA EJECT command to the ATA device; 3) If the ATA MEDIA EJECT command completes with any error, then process ending status according to the IMMED bit (see 9.11.2) with the additional sense code set to MEDIA LOAD OR EJECT FAILED; and 4) If the MEDIA EJECT command completes without error and the IMMED bit is set to zero, then return GOOD status. If the ATA device does not support the Removable Media feature set, then the SATL shall return CHECK CONDITION status with the sense key set to ILLEGAL REQUEST and the additional sense code set to INVALID FIELD IN CDB.
1	0	The SATL shall: 1) If the IMMED bit is set to one, then return GOOD status; 2) Send an ATA verify command (see 3.1.24) to the ATA device with the Count field set to one and the LBA set to a value between zero and the maximum LBA supported by the ATA device in its current configuration [b]; and 3) If the IMMED bit is set to one, then return GOOD status when command completion is received for the ATA verify command (see 3.1.24) [c].
1	1	The SATL shall return CHECK CONDITION status with the sense key set to ILLEGAL REQUEST, with the additional sense code set to INVALID FIELD IN CDB.

[a] After returning GOOD status for a START STOP UNIT command with the START bit set to zero, the SATL shall consider the ATA device to be in the Stopped power state (see SBC-2).

[b] An ATA device medium access occurs when an LBA is specified whose data is not contained in ATA device's cache memory. If a value in LBA is specified for an ATA verify command where the data is contained in ATA device's cache memory, then an ATA device may not be in the Active power mode (see ATA8-ACS) after completion of the ATA verify command.

[c] After returning GOOD status for a START STOP UNIT command with the START bit set to one, the SATL shall consider the ATA device to be in the Active power state (see SBC-2).

Status
moverby Rejected 9/9/2008 1:27:08 PM -07'00'
Author: moverby Subject: Sticky Note Date: 9/9/2008 1:16:19 PM -07'00'
Rejected: Written as intended

Status
moverby None 9/9/2008 1:27:11 PM -07'00'

Number: 15 Author: HPQ-jwolford Subject: Comment on Text Date: 9/3/2008 9:44:02 AM -07'00'
one
s/b
zero

Status
moverby Accepted 11/3/2008 8:47:18 PM

Number: 16 Author: bmartin Subject: Highlight Date: 9/4/2008 12:28:06 AM -07'00'
one,

s/b

zero

Status
moverby Accepted 11/3/2008 8:47:15 PM

Number: 17 Author: Kevin_Marks Subject: Highlight Date: 8/25/2008 1:32:02 PM -07'00'
(see SBC-2).
s/b
(see SBC-3).

Status
moverby Accepted 11/3/2008 8:47:22 PM

Number: 18 Author: Kevin_Marks Subject: Highlight Date: 8/25/2008 1:32:50 PM -07'00'
(see SBC-2).
s/b
(see SBC-3).

Status
moverby Accepted 11/3/2008 8:47:27 PM

9.11.4 NOFLUSH translation

If the NOFLUSH bit is set to one, the SATL shall not send an ATA flush command. If the NOFLUSH bit is set to zero, the SATL shall send an ATA flush command.

9.12 SYNCHRONIZE CACHE (10) command

The SYNCHRONIZE CACHE (10) command is used to flush the most recent data in the cache of the ATA device to physical medium.

Table 47 shows the translation for fields ~~specified~~ in the SYNCHRONIZE CACHE (10) CDB.

Table 47 — SYNCHRONIZE CACHE (10) CDB field translations

Field	Description or reference
OPERATION CODE	Set to 35h. The SATL shall send an ATA flush command (see 3.1.12) in accordance with the constraints described in 9.1.
SYNC_NV	Unspecified (see 3.4.2)
IMMED	If the IMMED bit is set to one the SATL shall return GOOD status and then send an ATA flush command. If the IMMED bit is set to zero the SATL shall send an ATA flush command and return status upon completion.
LOGICAL BLOCK ADDRESS	The SATL shall ignore this field and shall process this command as though this field contained zero.
GROUP NUMBER	Unspecified (see 3.4.2)
NUMBER OF BLOCKS	The SATL shall ignore this field and shall process this command as though this field contained zero (see SBC-2).
CONTROL	6.5

9.13 SYNCHRONIZE CACHE (16) command

The SYNCHRONIZE CACHE (16) command is used to flush the most recent data in the cache of the ATA device to physical medium.

Table 48 shows the translation for fields ~~specified~~ in the SYNCHRONIZE CACHE (16) CDB.

Table 48 — SYNCHRONIZE CACHE (16) CDB field translations

Field	Description or reference
OPERATION CODE	Set to 91h. The SATL shall send an ATA flush command (see 3.1.12) in accordance with the constraints described in 9.1.
SYNC_NV	Unspecified (see 3.4.2)
IMMED	If the IMMED bit is set to one the SATL shall return GOOD status and then send an ATA flush command. If the IMMED bit is set to zero the SATL shall send an ATA flush command and return status upon completion.
LOGICAL BLOCK ADDRESS	The SATL shall ignore this field and shall process this command as though this field contained zero.
GROUP NUMBER	Unspecified (see 3.4.2)
NUMBER OF BLOCKS	The SATL shall ignore this field and shall process this command as though this field contained zero (see SBC-2).
CONTROL	6.5

Page: 93

Number: 1 Author: HPQ-RElliott Subject: Highlight Date: 9/3/2008 9:42:24 AM -07'00'

If the NOFLUSH bit is set to one, the SATL shall not send an ATA flush command. If the NOFLUSH bit is set to zero, the SATL shall send an ATA flush command.

Really, this field is just used in table 45 while interpreting certain POWER CONDITION values; these statements don't make sense on their own.

Reword to something generic like:
The NOFLUSH bit specifies whether the SATL sends an ATA flush condition while processing certain power condition requests (see table 45 in 9.11.2).

Status
moverby Accepted 11/3/2008 8:44:49 PM

Number: 2 Author: Kevin_Marks Subject: Highlight Date: 8/25/2008 1:37:15 PM -07'00'

command.
s/b
command as part of emulating the START STOP UNIT command.

Status
moverby Rejected 11/3/2008 8:45:07 PM
Author: moverby Subject: Sticky Note Date: 11/3/2008 8:45:03 PM
Rejected in favor of Rob Elliott rewrite.

Number: 3 Author: HPQ-RElliott Subject: Cross-Out Date: 9/3/2008 9:42:24 AM -07'00'

Delete
specified

for consistency

Status
moverby Accepted 11/3/2008 8:45:14 PM

Number: 4 Author: LSI-Besmer Subject: Note Date: 9/3/2008 8:49:18 AM -07'00'

Extra space prior to Unspecified

Status
moverby Accepted 11/3/2008 8:45:19 PM

Number: 5 Author: Kevin_Marks Subject: Highlight Date: 8/25/2008 1:40:26 PM -07'00'

(see SBC-2).
s/b
(see SBC-3).

Status
moverby Accepted 11/3/2008 8:45:23 PM

Number: 6 Author: HPQ-RElliott Subject: Cross-Out Date: 9/3/2008 9:42:24 AM -07'00'

Delete
specified

for consistency

Status
moverby Accepted 11/3/2008 8:45:34 PM

Number: 7 Author: HPQ-RElliott Subject: Note Date: 9/3/2008 9:42:24 AM -07'00'

Replace SYNC_NV, IMMED, LOGICAL BLOCK ADDRESS, GROUP NUMBER, and NUMBER OF BLOCKS descriptions with:
As defined in SYNCHRONIZE (10) (see 9.12)

Status
moverby Accepted 11/3/2008 8:45:41 PM

Number: 8 Author: Kevin_Marks Subject: Highlight Date: 8/25/2008 1:40:56 PM -07'00'

(see SBC-2).
s/b
(see SBC-3).

Status
moverby Accepted 11/3/2008 8:45:48 PM

9.14 VERIFY (10) command

The VERIFY (10) command is used to verify data on the ATA device's medium. Table 49 describes the translation of fields in the VERIFY (10) CDB.

Table 49 — VERIFY (10) CDB field translations

Field	Description or reference
OPERATION CODE	Set to 2Fh. The SATL shall send an ATA verify command (see 3.1.24) in accordance with the constraints defined in 9.1.
VRPROTECT	Unspecified (see 3.4.2)
DPO	Unspecified (see 3.4.2)
BYTCHK	If the SATL supports a BYTCHK bit set to one and if the BYTCHK bit is set to one, then the SATL shall perform a byte-by-byte comparison of the data transferred from the application client to the SATL with data read from the ATA device by the SATL, and return completion status reflecting the results of the comparison as described in ~~(see SBC-2)~~.
LOGICAL BLOCK ADDRESS	The logical block address shall be used to set the ATA LBA (see 3.1.15) as defined by 9.1. If the SATL implements direct logical block mapping (see 3.1.35), then the SATL shall set the ATA LBA in the ATA verify command (see 3.1.24) equal to the value specified in the LOGICAL BLOCK ADDRESS field. Otherwise, the mapping is unspecified (see 3.4.2).
GROUP NUMBER	Unspecified (see 3.4.2)
VERIFICATION LENGTH	The verification length shall be used to set the ATA Sector Count as defined in 9.1. If the SATL implements direct logical block mapping (see 3.1.35), then the SATL shall set the ATA Sector Count (see 3.1.16) in the ATA verify command (see 3.1.24) equal to the value specified in the VERIFICATION LENGTH field. Otherwise, the mapping is unspecified (see 3.4.2).
CONTROL	6.5

Page: 94

Number: 1 Author: HPQ-RElliott Subject: Highlight Date: 9/3/2008 9:42:24 AM -07'00'

describes
s/b
shows

for consistency

Status
moverby Accepted 11/3/2008 8:47:34 PM

Number: 2 Author: Kevin_Marks Subject: Highlight Date: 8/25/2008 1:53:17 PM -07'00'

Wondering if this needs to be expanded or change op code row. The operation code row, says shall use an ATA verify command, but if BYTCHK=1 then there is no need for the verify, but a read command.

Status
moverby Accepted 9/9/2008 1:24:35 PM -07'00'

Author: moverby Subject: Sticky Note Date: 9/9/2008 1:20:46 PM -07'00'

Add: If bytchk is set to zero, the SATL shall send an ATA verify command (see 3.1.24) in accordance with the constraints defined in 9.1.

Number: 3 Author: moverby Subject: Inserted Text Date: 9/9/2008 1:24:14 PM -07'00'

, using an ATA read command (see xxxxx),

Status
moverby Accepted 9/9/2008 1:24:28 PM -07'00'

Number: 4 Author: Kevin_Marks Subject: Highlight Date: 8/25/2008 1:46:27 PM -07'00'

(see SBC-2).
s/b
(see SBC-3).

Status
moverby Accepted 11/3/2008 8:47:37 PM

Number: 5 Author: moverby Subject: Replacement Text Date: 9/9/2008 1:21:14 PM -07'00'

SBC-3.

Status
moverby Accepted 9/9/2008 1:21:22 PM -07'00'

9.15 VERIFY (12) command

Table 50 describes the translation of fields in the VERIFY (12) CDB.

Table 50 — VERIFY (12) CDB field translations

Field	Description or reference
OPERATION CODE	Set to AFh. The SATL shall send an ATA verify command (see 3.1.24) in accordance with the constraints defined in 9.1.
VRPROTECT	Unspecified (see 3.4.2)
DPO	Unspecified (see 3.4.2)
BYTCHK	If the SATL supports a BYTCHK bit set to one and if the BYTCHK bit is set to one, then the SATL shall perform a byte-by-byte comparison of the data transferred from the application client to the SATL with data read from the ATA device by the SATL, and return completion status reflecting the results of the comparison as described in (see SBC-2).
LOGICAL BLOCK ADDRESS	The logical block address shall be used to set the ATA LBA (see 3.1.15) as defined by 9.1. If the SATL implements direct logical block mapping (see 3.1.35), then the SATL shall set the ATA LBA in the ATA verify command (see 3.1.24) equal to the value specified in the LOGICAL BLOCK ADDRESS field. Otherwise, the mapping is unspecified (see 3.4.2).
GROUP NUMBER	Unspecified (see 3.4.2)
VERIFICATION LENGTH	The verification length shall be used to set the ATA Sector Count as defined in 9.1. If the SATL implements direct logical block mapping (see 3.1.35), then the SATL shall set the ATA Sector Count (see 3.1.16) in the ATA verify command (see 3.1.24) equal to the value specified in the VERIFICATION LENGTH field. Otherwise, the mapping is unspecified (see 3.4.2).
CONTROL	6.5

Page: 95

Number: 1 Author: HPQ-RElliott Subject: Highlight Date: 9/3/2008 9:42:24 AM -07'00'

describes
s/b
shows

for consistency

Status
moverby Accepted 11/3/2008 8:47:42 PM

Number: 2 Author: Kevin_Marks Subject: Highlight Date: 8/25/2008 1:53:41 PM -07'00'

Wondering if this needs to be expanded or change op code row. The operation code row, says shall use an ATA verify command, but if BYTCHK=1 then there is no need for the verify, but a read command.

Status
moverby Rejected 9/9/2008 1:26:52 PM -07'00'

Author: moverby Subject: Sticky Note Date: 9/9/2008 1:25:50 PM -07'00'

Rejected in favor of other letter ballot comment to have this refer back to VERIFY(10) instead.

Status
moverby None 9/9/2008 1:26:57 PM -07'00'

Number: 3 Author: Kevin_Marks Subject: Highlight Date: 8/25/2008 1:53:57 PM -07'00'

(see SBC-2).
s/b
(see SBC-3).

Status
moverby Accepted 11/3/2008 8:47:46 PM

Number: 4 Author: HPQ-RElliott Subject: Note Date: 9/3/2008 9:42:24 AM -07'00'

In VERIFY (12), GROUP NUMBER belongs after VERIFICATION LENGTH

Status
moverby Accepted 11/3/2008 8:47:50 PM

Number: 5 Author: HPQ-RElliott Subject: Note Date: 9/3/2008 9:42:24 AM -07'00'

Replace VRPROTECT, DPO, BYTCHK, LOGICAL BLOCK ADDRESS, GROUP NUMBER, and VERIFICATION LENGTH descriptions with:
As defined in VERIFY (10) (see 9.14)

Status
moverby Accepted 11/3/2008 8:47:54 PM

9.16 VERIFY (16) command

Table 51 describes the translation of fields in the VERIFY (16) CDB.

Table 51 — VERIFY (16) CDB field translations

Field	Description or reference
OPERATION CODE	Set to 8Fh. The SATL shall send an ATA verify command (see 3.1.24) in accordance with the constraints defined in 9.1.
VRPROTECT	Unspecified (see 3.4.2)
DPO	Unspecified (see 3.4.2)
BYTCHK	If the SATL supports a BYTCHK bit set to one and if the BYTCHK bit is set to one, then the SATL shall perform a byte-by-byte comparison of the data transferred from the application client to the SATL with data read from the ATA device by the SATL, and return completion status reflecting the results of the comparison as described in (see SBC-2).
LOGICAL BLOCK ADDRESS	The logical block address shall be used to set the ATA LBA (see 3.1.15) as defined by 9.1. If the SATL implements direct logical block mapping (see 3.1.35), then the SATL shall set the ATA LBA in the ATA verify command (see 3.1.24) equal to the value specified in the LOGICAL BLOCK ADDRESS field. Otherwise, the mapping is unspecified (see 3.4.2).
GROUP NUMBER	Unspecified (see 3.4.2)
VERIFICATION LENGTH	The verification length shall be used to set the ATA Sector Count as defined in 9.1. If the SATL implements direct logical block mapping (see 3.1.35), then the SATL shall set the ATA Sector Count (see 3.1.16) in the ATA verify command (see 3.1.24) equal to the value specified in the VERIFICATION LENGTH field. Otherwise, the mapping is unspecified (see 3.4.2).
CONTROL	6.5

Page: 96

Number: 1 Author: HPQ-RElliott Subject: Highlight Date: 9/3/2008 9:42:24 AM -07'00'

describes
s/b
shows

for consistency

Status
moverby Accepted 11/3/2008 8:48:00 PM

Number: 2 Author: HPQ-RElliott Subject: Note Date: 9/3/2008 9:42:24 AM -07'00'

In VERIFY (16), GROUP NUMBER belongs after VERIFICATION LENGTH

Status
moverby Accepted 11/3/2008 8:48:03 PM

Number: 3 Author: Kevin_Marks Subject: Highlight Date: 8/25/2008 1:54:57 PM -07'00'

Wondering if this needs to be expanded or change op code row. The operation code row, says shall use an ATA verify command, but if BYTCHK=1 then there is no need for the verify, but a read command.

Status
moverby Rejected 9/9/2008 1:26:39 PM -07'00'

Author: moverby Subject: Sticky Note Date: 9/9/2008 1:26:19 PM -07'00'

Rejected in favor of letter ballot comment to have this cell point back to VERIFY(10).

Status
moverby None 9/9/2008 1:26:44 PM -07'00'

Number: 4 Author: Kevin_Marks Subject: Highlight Date: 8/25/2008 1:54:15 PM -07'00'

(see SBC-2).
s/b
(see SBC-3).

Status
moverby Rejected 11/3/2008 8:48:33 PM

Author: moverby Subject: Sticky Note Date: 11/3/2008 8:48:29 PM

Rejected in favor of Rob Elliott comment to make all fields that are the same as VERIFY(10) point back to VERIFY(10).

Number: 5 Author: HPQ-RElliott Subject: Note Date: 9/3/2008 9:42:24 AM -07'00'

Replace VRPROTECT, DPO, BYTCHK, LOGICAL BLOCK ADDRESS, GROUP NUMBER, and VERIFICATION LENGTH descriptions with:
As defined in VERIFY (10) (see 9.14)

Status
moverby Accepted 11/3/2008 8:48:38 PM

9.17 WRITE commands overview

9.17.1 WRITE commands operation code translation

This subclause applies to the translation of SCSI WRITE(6), WRITE(10), WRITE(12), and WRITE(16) commands.

The SATL shall transfer the logical blocks specified in the SCSI write command (see 3.1.80) from the SCSI application client to the ATA device. The SATL shall send ATA write commands (see 3.1.26) in accordance with the constraints specified in 9.1.

9.17.2 WRITE commands with FUA

This subclause applies to the translation of WRITE (10), WRITE (12), and WRITE (16) commands.

If the FUA bit is set to zero in the SCSI write command CDB, then the SATL shall process this command as described in 9.17.1.

If the FUA bit is set to one in the SCSI write command CDB, then the SATL shall send the following, in accordance with the constraints described in 9.1:

a) two ATA commands as follows:
   1) an ATA write command (see 3.1.26) excluding WRITE DMA FUA EXT, WRITE DMA QUEUED FUA EXT, WRITE MULTIPLE FUA EXT, and WRITE FPDMA QUEUE; and
   2) an ATA verify command (see 3.1.24);

b) one of the following ATA commands (see ATA8-ACS):
   A) WRITE DMA FUA EXT;
   B) WRITE DMA QUEUED FUA EXT; or
   C) WRITE MULTIPLE FUA EXT;
   or

c) an ATA WRITE FPDMA QUEUED command (see SATA-2.6) with the FUA bit in the Device field set to one.

See 5.4 for a description of multiple command sequence error handling.

Page: 97

Number: 1 Author: HPQ-RElliott Subject: Note Date: 9/3/2008 9:42:24 AM -07'00'

For consistency, add:
9.xx VERIFY commands overview
9.xx WRITE LONG commands overview
9.xx WRITE SAME commands overview

Status
moverby Rejected 11/4/2008 2:15:06 PM

Author: moverby Subject: Sticky Note Date: 11/4/2008 10:41:43 AM

Jeff Wolford will talk to Rob Elliott about what comment is intending to do

Author: moverby Subject: Sticky Note Date: 11/4/2008 2:15:02 PM

After discussion in the Nov WG meeting it was decided that the way the commands layer in WRITE necessitate this approach, whereas VERIFY, WRITE LONG, and WRITE SAME can just point back to the predecessor command.

Number: 2 Author: LSI-Penokie Subject: Highlight Date: 8/20/2008 10:23:53 AM -07'00'

This should be << of WRITE(6) command, WRITE(10) command, WRITE(12) command, and WRITE(16) command.

Status
moverby Accepted 9/9/2008 1:29:00 PM -07'00'

Number: 3 Author: LSI-Penokie Subject: Highlight Date: 8/20/2008 10:24:21 AM -07'00'

This should be << WRITE (10) command, WRITE (12) command, and WRITE (16) command >>

Status
moverby Rejected 11/3/2008 8:49:36 PM

Author: moverby Subject: Sticky Note Date: 11/3/2008 8:49:32 PM

Rejected. Commands covers all of them.

Number: 4 Author: LSI-Penokie Subject: Highlight Date: 8/20/2008 10:32:18 AM -07'00'

This should be << a) the following ATA commands: >>

Status
moverby Accepted 11/3/2008 8:49:56 PM

Number: 5 Author: Kevin_Marks Subject: Sticky Note Date: 9/9/2008 1:29:30 PM -07'00'

The reasoning for these two commands is? ATA black magic?

Status
moverby Rejected 9/9/2008 1:32:04 PM -07'00'

Author: moverby Subject: Sticky Note Date: 9/9/2008 1:31:59 PM -07'00'

Rejected: Yes - ATA black magic. (As designed)

9.18 WRITE (6) command

The WRITE (6) command is used to request the SATL to transfer user data from the application client to the ATA device. Data may be written to the medium or to the cache of the ATA device.

Table 52 shows the translation of fields ~~specified~~ in the WRITE (6) CDB.

Table 52 — WRITE (6) CDB field translations

Field	Description or reference
OPERATION CODE	Set to 0Ah. See 9.17.1.
LOGICAL BLOCK ADDRESS	The logical block address shall be used to set the ATA LBA (see 3.1.15) as defined by 9.1. If the SATL implements direct logical block mapping (see 3.1.35), then the SATL shall set the ATA LBA in the ATA write command (see 3.1.26) equal to the value specified in the LOGICAL BLOCK ADDRESS field. Otherwise, the mapping is unspecified (see 3.4.2).
TRANSFER LENGTH [a]	The transfer length shall be used to set the ATA Sector Count (see 3.1.22), as defined by 9.1. If the SATL implements direct logical block mapping (see 3.1.35), then the SATL shall set the ATA Sector Count (see 3.1.22) in the ATA write command (see 3.1.26) equal to the value specified in the TRANSFER LENGTH field. Otherwise, the mapping is unspecified (see 3.4.2).
CONTROL	6.5

[a] A TRANSFER LENGTH field set to zero specifies a transfer of 256 logical blocks (see SBC-2).

Page: 98

Number: 1 Author: HPQ-RElliott Subject: Cross-Out Date: 9/3/2008 9:42:24 AM -07'00'

Delete
specified

for consistency

Status
moverby Accepted 11/3/2008 8:50:07 PM

Number: 2 Author: Kevin_Marks Subject: Highlight Date: 8/25/2008 2:12:04 PM -07'00'

(see SBC-2).
s/b
(see SBC-3).

Status
moverby Accepted 11/3/2008 8:50:15 PM

9.19 WRITE (10) command

The WRITE (10) command is used to request the SATL to transfer user data from the application client to the ATA device. Data may be written to the medium or to the cache of the ATA device.

Table 53 shows the translation of fields ~~specified~~ in the WRITE (10) CDB.

Table 53 — WRITE (10) CDB field translations

Field	Description or reference
OPERATION CODE	Set to 2Ah. See 9.17.1 and 9.17.2.
WRPROTECT	Unspecified (see 3.4.2)
DPO	Unspecified (see 3.4.2)
FUA	9.17.2
FUA_NV	The SATL may ignore the FUA_NV bit, or the SATL may implement the FUA_NV bit as defined in SBC-2. Note 1 - Some application clients may expect the device server to return CHECK CONDITION status if the FUA-NV bit is set to one and the Extended INQUIRY Data VPD page is not supported.
LOGICAL BLOCK ADDRESS	The logical block address shall be used to set the ATA LBA (see 3.1.15), as defined by 9.1. If the SATL implements direct logical block mapping (see 3.1.35), then the SATL shall set the ATA LBA in the ATA write command (see 3.1.26) equal to the value specified in the LOGICAL BLOCK ADDRESS field. Otherwise, the mapping is unspecified (see 3.4.2).
GROUP NUMBER	Unspecified (see 3.4.2)
TRANSFER LENGTH[a]	The transfer length is used to set the ATA Sector Count (see 3.1.22) , as defined by 9.1. If the SATL implements direct logical block mapping (see 3.1.35), then the SATL shall set the ATA Sector Count in the ATA write command (see 3.1.26) equal to the value specified in the TRANSFER LENGTH field. Otherwise, the mapping is unspecified (see 3.4.2). The SATL shall send as many ATA write commands (see 3.1.26) as needed to satisfy the transfer length specified by the WRITE (10) command.
CONTROL	6.5

[a] A transfer length of zero specifies that a data transfer shall not take place.

Page: 99

Number: 1 Author: HPQ-RElliott Subject: Cross-Out Date: 9/3/2008 9:42:24 AM -07'00'

Delete
specified

for consistency

Status
moverby Accepted 11/3/2008 8:50:26 PM

Number: 2 Author: Kevin_Marks Subject: Cross-Out Date: 8/25/2008 2:12:59 PM -07'00'

Status
moverby Accepted 11/3/2008 8:50:46 PM

Number: 3 Author: Kevin_Marks Subject: Highlight Date: 8/25/2008 2:13:38 PM -07'00'

SBC-2.
s/b
SBC-3.

Status
moverby Accepted 11/3/2008 8:50:42 PM

Number: 4 Author: Kevin_Marks Subject: Highlight Date: 8/25/2008 2:16:40 PM -07'00'

This should be a table note.

Status
moverby Rejected 11/3/2008 8:51:15 PM
Author: moverby Subject: Sticky Note Date: 11/3/2008 8:51:11 PM
Rejected in favor of deleting the note.

Number: 5 Author: LSI-Penokie Subject: Highlight Date: 8/20/2008 10:35:07 AM -07'00'

This note should not be numbered. Change to << Note - Some... >>

Status
moverby Accepted 11/3/2008 8:51:03 PM
Author: moverby Subject: Sticky Note Date: 11/3/2008 8:50:59 PM
Delete note.

9.20 WRITE (12) command

The WRITE (12) command is used to request the SATL to transfer user data from the application client to the ATA device. Data may be written to the medium or to the cache of the ATA device.

Table 54 shows the translation of fields ~~specified~~ in the WRITE (12) CDB.

Table 54 — WRITE (12) CDB field translations

Field	Description or reference
OPERATION CODE	Set to AAh. See 9.17.1 and 9.17.2.
WRPROTECT	Unspecified (see 3.4.2)
DPO	Unspecified (see 3.4.2)
FUA	9.17.2
FUA_NV	The SATL may ignore the FUA_NV bit, or the SATL may implement the FUA_NV bit as defined in SBC-2. Note 1 - Some application clients may expect the device server to return CHECK CONDITION status if the FUA-NV bit is set to one and the Extended INQUIRY Data VPD page is not supported.
LOGICAL BLOCK ADDRESS	The logical block address shall be used to set the ATA LBA (see 3.1.15), as defined by 9.1. If the SATL implements direct logical block mapping (see 3.1.35), then the SATL shall set the ATA LBA in the ATA write command (see 3.1.26) equal to the value specified in the LOGICAL BLOCK ADDRESS field. Otherwise, the mapping is unspecified (see 3.4.2).
GROUP NUMBER	Unspecified (see 3.4.2)
TRANSFER LENGTH[a]	The transfer length is used to set the ATA Sector Count (see 3.1.22) , as defined by 9.1. If the SATL implements direct logical block mapping (see 3.1.35), then the SATL shall set the ATA Sector Count in the ATA write command (see 3.1.26) equal to the value specified in the TRANSFER LENGTH field. Otherwise, the mapping is unspecified (see 3.4.2). The SATL shall send as many ATA write commands (see 3.1.26) as needed to satisfy the transfer length specified by the WRITE (12) command.
CONTROL	6.5

[a] A transfer length of zero specifies that a data transfer shall not take place.

Page: 100

Number: 1 Author: HPQ-RElliott Subject: Cross-Out Date: 9/3/2008 9:42:24 AM -07'00'

Delete
specified

for consistency

Status
moverby Accepted 11/3/2008 8:51:22 PM

Number: 2 Author: Kevin_Marks Subject: Highlight Date: 8/25/2008 2:18:11 PM -07'00'

SBC-2.
s/b
SBC-3.

Status
moverby Accepted 11/3/2008 8:51:27 PM

Number: 3 Author: Kevin_Marks Subject: Highlight Date: 8/25/2008 2:16:57 PM -07'00'

This should be a table note.

Status
moverby Rejected 11/3/2008 8:51:59 PM
Author: moverby Subject: Sticky Note Date: 11/3/2008 8:51:51 PM
Rejected in favor of deleting note.

Number: 4 Author: LSI-Penokie Subject: Highlight Date: 8/20/2008 10:35:47 AM -07'00'

This note should not be numbered. Change to << Note - Some... >>

Status
moverby Accepted 11/3/2008 8:51:43 PM
Author: moverby Subject: Sticky Note Date: 11/3/2008 8:51:33 PM
Delete note.

Number: 5 Author: HPQ-RElliott Subject: Note Date: 9/3/2008 9:42:24 AM -07'00'

For WRITE (12), GROUP NUMBER goes after TRANSFER LENGTH

Status
moverby Accepted 11/3/2008 8:52:04 PM

Number: 6 Author: HPQ-RElliott Subject: Note Date: 9/3/2008 9:42:24 AM -07'00'

Replace WRPROTECT, DPO, FUA, FUA_NV, LOGICAL BLOCK ADDRESS, GROUP NUMBER, and TRANSFER LENGTH descriptions with:
As defined in WRITE (10) (see 9.19)

Status
moverby Accepted 11/3/2008 8:52:11 PM

9.21 WRITE (16) command

The WRITE (16) command is used to request the SATL to transfer user data from the application client to the ATA device. Data may be written to the medium or to the cache of the ATA device.

Table 55 shows the translation of fields ~~specified~~ in the WRITE (16) CDB.

Table 55 — WRITE (16) CDB field translations

Field	Description or reference
OPERATION CODE	Set to 8Ah. See 9.17.1 and 9.17.2.
WRPROTECT	Unspecified (see 3.4.2)
DPO	Unspecified (see 3.4.2)
FUA	9.17.2
FUA_NV	The SATL may ignore the FUA_NV bit, or the SATL may implement the FUA_NV bit as defined in SBC-2.
LOGICAL BLOCK ADDRESS	The logical block address shall be used to set the ATA LBA (see 3.1.15), as defined by 9.1. If the SATL implements direct logical block mapping (see 3.1.35), then the SATL shall set the ATA LBA in the ATA write command (see 3.1.26) equal to the value specified in the LOGICAL BLOCK ADDRESS field. Otherwise, the mapping is unspecified (see 3.4.2).
GROUP NUMBER	Unspecified (see 3.4.2)
TRANSFER LENGTH[b]	The transfer length is used to set the ATA Sector Count (see 3.1.22) , as defined by 9.1. If the SATL implements direct logical block mapping (see 3.1.35), then the SATL shall set the ATA Sector Count in the ATA write command (see 3.1.26) equal to the value specified in the TRANSFER LENGTH field. Otherwise, the mapping is unspecified (see 3.4.2). The SATL shall send as many ATA write commands (see 3.1.26) as needed to satisfy the transfer length specified by the WRITE (16) command.
CONTROL	6.5

[a] Some application clients may expect the device server to return CHECK CONDITION status if the FUA-NV bit is set to one and the Extended INQUIRY Data VPD page is not supported.
[b] A transfer length of zero specifies that a data transfer shall not take place.

9.22 WRITE AND VERIFY commands overview

This subclause applies to the translation of WRITE AND VERIFY (10), WRITE AND VERIFY (12), and WRITE AND VERIFY (16) commands.

The SATL shall send:

1) an ATA write command (see 3.1.26) in accordance with the constraints defined in 9.1; and
2) an ATA verify command (see 3.1.24).

Page: 101

Number: 1 Author: HPQ-RElliott Subject: Cross-Out Date: 9/3/2008 9:42:24 AM -07'00'

Delete
specified

for consistency

Status
moverby Accepted 11/3/2008 8:52:18 PM

Number: 2 Author: Kevin_Marks Subject: Highlight Date: 8/25/2008 2:20:29 PM -07'00'

SBC-2.
s/b
SBC-3.

Status
moverby Rejected 11/3/2008 8:53:41 PM

Author: moverby Subject: Sticky Note Date: 11/3/2008 8:53:38 PM

Rejected in favor of fix to make this point back to WRITE(10)

Number: 3 Author: Kevin_Marks Subject: Sticky Note Date: 8/25/2008 2:21:29 PM -07'00'

Why is NOTE 1 missing as in WRITE (10) and (12)?

Status
moverby Rejected 11/3/2008 8:53:20 PM

Author: moverby Subject: Sticky Note Date: 11/3/2008 8:53:09 PM

Rejected in favor of Rob Elliott fix to make these fields point back to WRITE(10)

Number: 4 Author: HPQ-RElliott Subject: Note Date: 9/3/2008 9:42:24 AM -07'00'

For WRITE (16), GROUP NUMBER goes after TRANSFER LENGTH

Status
moverby Accepted 11/3/2008 8:52:40 PM

Number: 5 Author: HPQ-RElliott Subject: Highlight Date: 9/3/2008 9:42:24 AM -07'00'

FUA-NV
s/b
FUA_NV

Status
moverby Accepted 11/3/2008 8:52:47 PM

Number: 6 Author: HPQ-RElliott Subject: Note Date: 9/3/2008 9:42:24 AM -07'00'

As appropriate, replace WRPROTECT, DPO, FUA, FUA_NV, LOGICAL BLOCK ADDRESS, GROUP NUMBER, and TRANSFER LENGTH descriptions with:
As defined in WRITE (10) (see 9.19)

Note that this table is not literally the same (unlike WRITE (12)). WRITE (10) has a NOTE 1 inside the FUA_NV description, while this table has a similar footnote a. These discrepencies are why it is better to only have the rules one place.

Status
moverby Accepted 11/3/2008 8:53:14 PM

Number: 7 Author: LSI-Penokie Subject: Highlight Date: 8/20/2008 10:38:28 AM -07'00'

This should be << WRITE AND VERIFY (10) command, WRITE AND VERIFY (12) command, and WRITE AND VERIFY (16) command. >>

Status
moverby Rejected 11/3/2008 8:54:04 PM

Author: moverby Subject: Sticky Note Date: 11/3/2008 8:53:59 PM

Rejected. Commands covers them all.

Number: 8 Author: Kevin_Marks Subject: Sticky Note Date: 8/25/2008 2:38:26 PM -07'00'

Does this need to be expanded to include read command for BYTCHK=1.

Status
moverby Rejected 11/3/2008 8:55:42 PM

Author: moverby Subject: Sticky Note Date: 11/3/2008 8:55:37 PM

Rejecting. BYTCHK is covered in the translation of each command.

9.23 WRITE AND VERIFY (10) command

The WRITE AND VERIFY (10) command requests that the SATL to transfer the specified logical blocks from the application client to the ATA device, and then verify that the data was written correctly to the medium of the ATA device.

Table 56 shows the translation of fields ~~specified~~ in the WRITE AND VERIFY (10) CDB.

Table 56 — WRITE AND VERIFY (10) CDB field translations

Field	Description or reference
OPERATION CODE	Set to 2Eh. See 9.22.
WRPROTECT	Unspecified (see 3.4.2)
DPO	Unspecified (see 3.4.2)
BYTCHK	If the SATL supports a BYTCHK bit set to one and the BYTCHK bit is set to one, then after writing the data to the medium the SATL shall read the data from the medium and perform a byte-by-byte comparison of the data transferred from the application client to the SATL with data read from the ATA device, and then shall return completion status reflecting the results of the comparison (see SBC-2).
LOGICAL BLOCK ADDRESS	The logical block address shall be used to set the ATA LBA (see 3.1.15), as defined by 9.1. If the SATL implements direct logical block mapping (see 3.1.35), then the SATL shall set the ATA LBA in the ATA write command (see 3.1.26) and the ATA verify command (see 3.1.24) equal to the value specified in the LOGICAL BLOCK ADDRESS field. Otherwise, the mapping is unspecified (see 3.4.2).
GROUP NUMBER	Unspecified (see 3.4.2)
TRANSFER LENGTH[a]	The transfer length is used to set the ATA Sector Count (see 3.1.22) , as defined by 9.1. If the SATL implements direct logical block mapping (see 3.1.35), then the SATL shall set the ATA Sector Count in the ATA write command (see 3.1.26) and the ATA verify command (see 3.1.24) equal to the value specified in the TRANSFER LENGTH field. Otherwise, the mapping is unspecified (see 3.4.2). The SATL shall send as many ATA write commands and ATA verify commands as needed to satisfy the transfer length specified by the WRITE AND VERIFY (10) command.
CONTROL	6.5

[a] A transfer length of zero specifies that a data transfer shall not take place.

Page: 102

Number: 1 Author: HPQ-RElliott Subject: Cross-Out Date: 9/3/2008 9:42:24 AM -07'00'

Delete
specified

for consistency

Status
moverby Accepted 11/3/2008 8:55:48 PM

Number: 2 Author: moverby Subject: Sticky Note Date: 9/9/2008 1:47:15 PM -07'00'

Make the same changes to BYTCHK as was accepted for VERIFY(10) BYTCHK

Status
moverby Accepted 9/9/2008 1:47:20 PM -07'00'

Number: 3 Author: Kevin_Marks Subject: Highlight Date: 8/25/2008 2:30:20 PM -07'00'

(see SBC-2).
s/b
(see SBC-3).

Status
moverby Accepted 11/3/2008 8:55:52 PM

9.24 WRITE AND VERIFY (12) command

The WRITE AND VERIFY (12) command requests that the SATL to transfer the specified logical blocks from the application client to the ATA device, and then verify that the data was written correctly to the medium of the ATA device.

Table 57 shows the translation of fields ~~specified~~ in the WRITE AND VERIFY (12) CDB.

Table 57 — WRITE AND VERIFY (12) CDB field translations

Field	Description or reference
OPERATION CODE	Set to AEh. See 9.22.
WRPROTECT	Unspecified (see 3.4.2)
DPO	Unspecified (see 3.4.2)
BYTCHK	If the SATL supports a BYTCHK bit set to one and the BYTCHK bit is set to one, then after writing the data to the medium the SATL shall read the data from the medium and perform a byte-by-byte comparison of the data transferred from the application client to the SATL with data read from the ATA device, and then shall return completion status reflecting the results of the comparison (see SBC-2).
LOGICAL BLOCK ADDRESS	The logical block address shall be used to set the ATA LBA (see 3.1.15), as defined by 9.1. If the SATL implements direct logical block mapping (see 3.1.35), then the SATL shall set the ATA LBA in the ATA write command (see 3.1.26) and the ATA verify command (see 3.1.24) equal to the value specified in the LOGICAL BLOCK ADDRESS field. Otherwise, the mapping is unspecified (see 3.4.2).
GROUP NUMBER	Unspecified (see 3.4.2)
TRANSFER LENGTH[a]	The transfer length is used to set the ATA Sector Count (see 3.1.22) , as defined by 9.1. If the SATL implements direct logical block mapping (see 3.1.35), then the SATL shall set the ATA Sector Count in the ATA write command (see 3.1.26) and the ATA verify command (see 3.1.24) equal to the value specified in the TRANSFER LENGTH field. Otherwise, the mapping is unspecified (see 3.4.2). The SATL shall send as many ATA write commands and ATA verify commands as needed to satisfy the transfer length specified by the WRITE AND VERIFY (12) command.
CONTROL	6.5

[a] A transfer length of zero specifies that a data transfer shall not take place.

Page: 103

Number: 1 Author: HPQ-RElliott Subject: Cross-Out Date: 9/3/2008 9:42:24 AM -07'00'

Delete
specified

for consistency

Status
moverby Accepted 11/3/2008 8:56:07 PM

Number: 2 Author: Kevin_Marks Subject: Highlight Date: 8/25/2008 2:50:36 PM -07'00'

(see SBC-2).
s/b
(see SBC-3).

Status
moverby Accepted 11/3/2008 8:56:12 PM

Number: 3 Author: HPQ-RElliott Subject: Note Date: 9/3/2008 9:42:24 AM -07'00'

For WRITE AND VERIFY (12), GROUP NUMBER goes after TRANSFER LENGTH

Status
moverby Accepted 11/3/2008 8:56:16 PM

Number: 4 Author: HPQ-RElliott Subject: Note Date: 9/3/2008 9:42:24 AM -07'00'

Replace WRPROTECT, DPO, BYTCHK, LOGICAL BLOCK ADDRESS, GROUP NUMBER, and TRANSFER LENGTH descriptions with:
As defined in WRITE AND VERIFY (10) (see 9.23)

Status
moverby Accepted 11/3/2008 8:56:19 PM

9.25 WRITE AND VERIFY (16) command

The WRITE AND VERIFY (16) command requests that the SATL to transfer the specified logical blocks from the application client to the ATA device, and then verify that the data was written correctly to the medium of the ATA device.

Table 58 shows the translation of fields ~~specified~~ in the WRITE AND VERIFY (16) CDB.

Table 58 — WRITE AND VERIFY (16) CDB field translations

Field	Description or reference
OPERATION CODE	Set to 8Eh. See 9.22.
WRPROTECT	Unspecified (see 3.4.2)
DPO	Unspecified (see 3.4.2)
BYTCHK	If the SATL supports a BYTCHK bit set to one and the BYTCHK bit is set to one, then after writing the data to the medium the SATL shall read the data from the medium and perform a byte-by-byte comparison of the data transferred from the application client to the SATL with data read from the ATA device, and then shall return completion status reflecting the results of the comparison (see SBC-2).
LOGICAL BLOCK ADDRESS	The logical block address shall be used to set the ATA LBA (see 3.1.15), as defined by 9.1. If the SATL implements direct logical block mapping (see 3.1.35), then the SATL shall set the ATA LBA in the ATA write command (see 3.1.26) and the ATA verify command (see 3.1.24) equal to the value specified in the LOGICAL BLOCK ADDRESS field. Otherwise, the mapping is unspecified (see 3.4.2).
GROUP NUMBER	Unspecified (see 3.4.2)
TRANSFER LENGTH[a]	The transfer length is used to set the ATA Sector Count (see 3.1.22) , as defined by 9.1. If the SATL implements direct logical block mapping (see 3.1.35), then direct logical block mappingthe SATL shall set the ATA Sector Count in the ATA write command (see 3.1.26) and the ATA verify command (see 3.1.24) equal to the value specified in the TRANSFER LENGTH field. Otherwise, the mapping is unspecified (see 3.4.2). The SATL shall send as many ATA write commands and ATA verify commands as needed to satisfy the transfer length specified by the WRITE AND VERIFY (16) command.
CONTROL	6.5

[a] A transfer length of zero specifies that a data transfer shall not take place.

9.26 WRITE LONG (10) command

The WRITE LONG (10) command (see SBC-3) requests that the SATL mark a logical block or physical block as containing an error.

Table 59 shows the translation of fields ~~specified~~ in the WRITE LONG (10) CDB.

Page: 104

Number: 1 Author: HPQ-RElliott Subject: Cross-Out Date: 9/3/2008 9:42:24 AM -07'00'

Delete
specified

for consistency

Status
moverby Accepted 11/3/2008 8:56:26 PM

Number: 2 Author: Kevin_Marks Subject: Highlight Date: 8/25/2008 2:52:42 PM -07'00'

(see SBC-2).
s/b
(see SBC-3).

Status
moverby Rejected 11/3/2008 8:57:35 PM

Author: moverby Subject: Sticky Note Date: 11/3/2008 8:57:31 PM

Rejected in favor of Rob Elliott comment to have these fields point back to WRITE AND VERIFY(10).

Number: 3 Author: HPQ-RElliott Subject: Note Date: 9/3/2008 9:42:24 AM -07'00'

For WRITE AND VERIFY (16), GROUP NUMBER goes after TRANSFER LENGTH

Status
moverby Accepted 11/3/2008 8:57:39 PM

Number: 4 Author: HPQ-RElliott Subject: Highlight Date: 9/3/2008 9:42:24 AM -07'00'

mappingthe
s/b
mapping the

Status
moverby Accepted 11/3/2008 8:57:43 PM

Number: 5 Author: HPQ-RElliott Subject: Note Date: 9/3/2008 9:42:24 AM -07'00'

Replace WRPROTECT, DPO, BYTCHK, LOGICAL BLOCK ADDRESS, GROUP NUMBER, and TRANSFER LENGTH descriptions with:
As defined in WRITE AND VERIFY (10) (see 9.23)

Status
moverby Accepted 11/3/2008 8:57:47 PM

Number: 6 Author: HPQ-RElliott Subject: Cross-Out Date: 9/3/2008 9:42:24 AM -07'00'

Delete
specified

for consistency

Status
moverby Accepted 11/3/2008 8:57:50 PM

Table 59 — WRITE LONG (10) CDB Field Translations

Field	Description or Reference
OPERATION CODE	Set to 3Fh. If the ATA device does not support the WRITE UNCORRECTABLE EXT command (see ATA8-ACS), the SATL shall terminate the command with CHECK CONDITION status, with the sense key set to ILLEGAL REQUEST and the additional sense code set to INVALID OPERATION CODE.
COR_DIS	See table 60.
WR_UNCOR	See table 60.
PBLOCK	See table 60.
LOGICAL BLOCK ADDRESS	The logical block address shall be used to set the ATA LBA (see 3.1.15) as defined by 9.1. If the SATL implements direct block mapping (see 3.1.35), then the SATL shal set the ATA LBA in the ATA WRITE UNCORRECTABLE EXT command equal to the value specified in the logical block address field. Otherwise the mapping is unspecified (see 3.4.2).
BYTE TRANSFER LENGTH	If the byte transfer length field is not set to zero, the SATL shall terminate the command with CHECK CONDITION status, with the sense key set to ILLEGAL REQUEST and the additional sense code set to INVALID FIELD IN CDB.
CONTROL	6.5

The interaction of the WR_UNCOR bit and the PBLOCK bit are defined in table 60.

Table 60 — WR_UNCOR bit and PBLOCK bit

COR_DIS	WR_UNCOR	PBLOCK	Description
0	1	0	If the ATA logical sectors per physical sector exponent is non-zero, then the SATL shall terminate the command with CHECK CONDITION status, with the sense key set to ILLEGAL REQUEST and the additional sense code set to INVALID FIELD IN CDB. If the ATA logical sectors per physical sector exponent is zero, then the SATL shall send a ATA WRITE UNCORRECTABLE EXT command with: a) the Feature field set to 55h (i.e, psuedo-uncorrectable error with logging); and b) the Count field set to 0001h.
0	1	1	The SATL shall send an ATA WRITE UNCORRECTABLE EXT command with: a) the Feature field set to 55h (i.e., psuedo-uncorrectable error with logging); and b) the Count field set to 0001h.
1	1	0	The SATL shall send an ATA WRITE UNCORRECTABLE EXT command with: a) the Feature field set to AAh (i.e., flagged error without logging); and b) the Count field set to 0001h.
All others			The SATL shall terminate the command with CHECK CONDITION status, with the sense key set to ILLEGAL REQUEST and the additional sense code set to INVALID FIELD IN CDB.

Page: 105

Number: 1 Author: HPQ-RElliott Subject: Highlight Date: 9/3/2008 9:42:24 AM -07'00'

Field Translations
s/b
lowercase

Status
moverby Accepted 11/3/2008 9:00:03 PM

Number: 2 Author: Kevin_Marks Subject: Highlight Date: 8/25/2008 2:54:53 PM -07'00'

the WRITE
s/b
the ATA WRITE

Status
moverby Accepted 11/3/2008 9:00:07 PM

Number: 3 Author: Kevin_Marks Subject: Highlight Date: 8/25/2008 2:55:18 PM -07'00'

ACS), the
s/b
ACS), then the

Status
moverby Accepted 11/3/2008 9:00:12 PM

Number: 4 Author: Kevin_Marks Subject: Highlight Date: 8/25/2008 2:55:42 PM -07'00'

shal
s/b
shall

Status
moverby Accepted 11/3/2008 9:00:15 PM

Number: 5 Author: Kevin_Marks Subject: Highlight Date: 8/25/2008 2:56:03 PM -07'00'

if
s/b
If

Status
moverby Accepted 11/3/2008 9:00:26 PM

Number: 6 Author: Kevin_Marks Subject: Highlight Date: 8/25/2008 2:56:48 PM -07'00'

'byte transfer length' should be in small CAPS

Status
moverby Accepted 11/3/2008 9:00:23 PM

Number: 7 Author: HPQ-RElliott Subject: Note Date: 9/3/2008 9:42:24 AM -07'00'

delete whitespace above table 60

Status
moverby Accepted 11/3/2008 9:00:30 PM

9.27 WRITE LONG (16) command

The WRITE LONG (16) command (see SBC-3) requests that the SATL mark a logical block or phsical block as containing an error.

Table 61 shows the translation of fields ~~specified~~ in the WRITE LONG (16) CDB.

Table 61 — WRITE LONG (16) CDB Field Translations

Field	Description or Reference
OPERATION CODE / SERVICE ACTION	Set to 9Fh / 11h.
COR_DIS	As defined in WRITE LONG (10) (see 9.26)
WR_UNCOR	As defined in WRITE LONG (10) (see 9.26)
PBLOCK	As defined in WRITE LONG (10) (see 9.26)
LOGICAL BLOCK ADDRESS	As defined in WRITE LONG (10) (see 9.26)
BYTE TRANSFER LENGTH	As defined in WRITE LONG (10) (see 9.26)

Page: 106

Number: 1 Author: HPQ-RElliott Subject: Highlight Date: 9/3/2008 9:42:24 AM -07'00'

phsical
s/b
physical

Status
moverby Accepted 11/3/2008 9:00:42 PM

Number: 2 Author: HPQ-RElliott Subject: Cross-Out Date: 9/3/2008 9:42:24 AM -07'00'

Delete
specified

for consistency

Status
moverby Accepted 11/3/2008 9:00:46 PM

Number: 3 Author: HPQ-RElliott Subject: Highlight Date: 9/3/2008 9:42:24 AM -07'00'

Field Translations
s/b
lowercase

Status
moverby Accepted 11/3/2008 9:00:50 PM

9.28 WRITE SAME (10) command

9.28.1 WRITE SAME (10) command overview

The WRITE SAME (10) command (see table 62) requests that the SATL transfer a single logical block from the application clientand write the contents of that single logical block, with modifications based on the LBDATA bit and the PBDATA bit, to the specified range of logical block addresses on the ATA device.

Table 62 — WRITE SAME (10) CDB field translations

Field	Description or reference
OPERATION CODE	Set to 41h. If the ATA device supports the ATA SCT Write Same command (see ATA8-ACS), the SATL should send the ATA SCT Write Same command to repeatedly write the data block transferred from the application client to the ATA device. If the ATA device does not implement ATA SCT Write Same command then the SATL shall send ATA write commands as defined in 9.17.1.
WRPROTECT	Unspecified (see 3.4.2)
LBDATA	9.28.2
PBDATA	9.28.2
LOGICAL BLOCK ADDRESS	The logical block address shall be used to set the ATA LBA (see 3.1.15), as defined by 9.1. If the SATL implements direct logical block mapping (see 3.1.35), then the SATL shall set the Start in the ATA SCT Write Same command or the ATA LBA in the ATA write command (see 3.1.26) equal to the value specified in the LOGICAL BLOCK ADDRESS field. Otherwise, the mapping is unspecified (see 3.4.2).
GROUP NUMBER	Unspecified (see 3.4.2)
NUMBER OF BLOCKS	A NUMBER OF BLOCKS field set to zero specifies that the SATL shall repeatedly write the logical block transferred from the application client to the range of ATA logical sectors corresponding to the range of logical block addresses specified by the LOGICAL BLOCK ADDRESS field through the LBA of the last logical block on the logical unit. If the NUMBER OF BLOCKS field is set to a value other than zero, the SATL shall repeatedly write the data block transferred from the application client to the medium of the ATA device for the number of logical blocks specified to the corresponding logical sectors on the ATA device. The SATL shall send as many ATA commands as required to satisfy the number of blocks specified by the WRITE SAME (10) command.
CONTROL	6.5

Page: 107

Number: 1 Author: LSI-Penokie Subject: Highlight Date: 8/20/2008 10:51:52 AM -07'00'

There is a missing space between << client >> and << and >>.

Status
moverby Accepted 11/3/2008 9:01:13 PM

Number: 2 Author: Kevin_Marks Subject: Highlight Date: 8/25/2008 3:04:11 PM -07'00'

clientand
s/b
client and

Status
moverby Accepted 11/3/2008 9:01:09 PM

Number: 3 Author: HPQ-RElliott Subject: Highlight Date: 9/3/2008 9:42:24 AM -07'00'

clientand
s/b
client and

Status
moverby Accepted 11/3/2008 9:01:05 PM

Number: 4 Author: HPQ-RElliott Subject: Note Date: 9/3/2008 9:42:24 AM -07'00'

Add "shows" sentence for consistency

Status
moverby Accepted 11/4/2008 10:42:37 AM

Number: 5 Author: Kevin_Marks Subject: Highlight Date: 8/25/2008 3:07:26 PM -07'00'

ACS), the
s/b
ACS), then the

Status
moverby Accepted 11/3/2008 9:01:28 PM

Number: 6 Author: HPQ-RElliott Subject: Note Date: 9/3/2008 9:42:24 AM -07'00'

PBDATA goes ahead of LBDATA

Status
moverby Accepted 11/3/2008 9:01:33 PM

Number: 7 Author: HPQ-RElliott Subject: Highlight Date: 9/3/2008 9:42:24 AM -07'00'

NUMBER OF BLOCKS
s/b
NUMBER OF LOGICAL BLOCKS

Status
moverby Accepted 11/3/2008 9:01:38 PM

Number: 8 Author: Kevin_Marks Subject: Highlight Date: 8/25/2008 3:09:57 PM -07'00'

zero, the
s/b
zero, then the

Status
moverby Accepted 11/3/2008 9:01:42 PM

Number: 9 Author: HPQ-RElliott Subject: Highlight Date: 9/3/2008 9:42:24 AM -07'00'

NUMBER OF BLOCKS
s/b
NUMBER OF LOGICAL BLOCKS

Status
moverby Accepted 11/3/2008 9:01:46 PM

Number: 10 Author: HPQ-RElliott Subject: Highlight Date: 9/3/2008 9:42:24 AM -07'00'

NUMBER OF BLOCKS
s/b
NUMBER OF LOGICAL BLOCKS

Status
moverby Accepted 11/3/2008 9:01:50 PM

9.28.2 LBDATA bit and PBDATA bit

The SATL shall write data to the specified logical block addresses according to the values in the LBDATA and PBDATA bits as shown in table 63.

Table 63 — LBDATA and PBDATA fields

LBDATA	PBDATA	Description
0	0	The SATL shall write the block of data transferred from the application client to the range of blocks specified in LOGICAL BLOCK ADDRESS field and NUMBER OF BLOCKS field, repeatedly, on the medium of the ATA device. If the ATA device supports the ATA SCT Write Same command, then the SATL should use the ATA SCT Write Same command with the Function Code set to 002h or 004h for writing the data. Otherwise, the SATL shall use ATA write commands as defined in 9.17.2 (see SBC-2).
1	0	The SATL shall replace the first four bytes of the logical block received from the application client with the least significant four bytes of the LBA of the logical block being written to the media, ending with the least significant byte (e.g., if the LBA is 7766_5544_3322_1100h, 3322_1100h is written with 33h written first and 00h written last). The SATL shall use ATA write commands as defined in 9.17.2 (see SBC-2).
0	1	The SATL shall terminate the command with CHECK CONDITION status with the sense key set to ILLEGAL REQUEST and the additional sense code set to INVALID FIELD IN CDB.
1	1	

Page: 108

Number: 1 Author: HPQ-RElliott Subject: Highlight Date: 9/3/2008 9:42:24 AM -07'00'

and
s/b
and the

Status
moverby Accepted 11/3/2008 9:02:10 PM

Number: 2 Author: HPQ-RElliott Subject: Highlight Date: 9/3/2008 9:42:24 AM -07'00'

in
s/b
in the

Status
moverby Accepted 11/3/2008 9:02:14 PM

Number: 3 Author: HPQ-RElliott Subject: Highlight Date: 9/3/2008 9:42:24 AM -07'00'

NUMBER OF BLOCKS
s/b
NUMBER OF LOGICAL BLOCKS

Status
moverby Accepted 11/3/2008 9:02:18 PM

Number: 4 Author: Kevin_Marks Subject: Highlight Date: 8/25/2008 3:14:44 PM -07'00'

002h or 004h
s/b
0002h or 0004h

Status
moverby Accepted 11/3/2008 9:02:22 PM

Number: 5 Author: Kevin_Marks Subject: Highlight Date: 8/25/2008 3:15:44 PM -07'00'

(see SBC-2).
s/b
(see SBC-3).

Status
moverby Accepted 11/3/2008 9:02:25 PM

Number: 6 Author: Kevin_Marks Subject: Highlight Date: 8/25/2008 3:15:54 PM -07'00'

(see SBC-2).
s/b
(see SBC-3).

Status
moverby Accepted 11/3/2008 9:02:29 PM

Number: 7 Author: Kevin_Marks Subject: Sticky Note Date: 8/25/2008 3:17:06 PM -07'00'

Remove white space.

Status
moverby Accepted 11/3/2008 9:02:33 PM

9.29 WRITE SAME (16) command

The WRITE SAME (16) command (see table 64) requests that the SATL transfer a single logical block from the application client and write the contents of that single logical block, with modifications based on the LBDATA bit and the PBDATA bit, to the specified range of logical block addresses on the ATA device.

Table 64 — WRITE SAME (16) CDB field translations

Field	Description or reference
OPERATION CODE	Set to 93h. If the ATA device supports the ATA SCT Write Same command (see ATA8-ACS), the SATL should send the ATA SCT Write Same command to repeatedly write the data block transferred from the application client to the ATA device. If the ATA device does not implement ATA SCT Write Same command then the SATL shall send ATA write commands as defined in 9.17.1.
WRPROTECT	Unspecified (see 3.4.2)
LBDATA	9.28.2
PBDATA	9.28.2
LOGICAL BLOCK ADDRESS	The logical block address shall be used to set the ATA LBA (see 3.1.15), as defined by 9.1. If the SATL implements direct logical block mapping (see 3.1.35), then the SATL shall set the Start in the ATA SCT Write Same command or the ATA LBA in the ATA write command (see 3.1.26) equal to the value specified in the LOGICAL BLOCK ADDRESS field. Otherwise, the mapping is unspecified (see 3.4.2).
GROUP NUMBER	Unspecified (see 3.4.2)
NUMBER OF BLOCKS	A NUMBER OF BLOCKS field set to zero specifies that the SATL shall repeatedly write the logical block transferred from the application client to the range of ATA logical sectors corresponding to the range of logical block addresses specified by the LOGICAL BLOCK ADDRESS field through the LBA of the last logical block on the logical unit. If the NUMBER OF BLOCKS field is set to a value other than zero, the SATL shall repeatedly write the data block transferred from the application client to the medium of the ATA device for the number of logical blocks specified to the corresponding logical sectors on the ATA device. The SATL shall send as many ATA commands as required to satisfy the number of blocks specified by the WRITE SAME (16) command.
CONTROL	6.5

Page: 109

Number: 1 Author: Kevin_Marks Subject: Highlight Date: 8/25/2008 3:19:32 PM -07'00'

clientand
s/b
client and

Status
moverby Accepted 11/3/2008 9:02:43 PM

Number: 2 Author: HPQ-RElliott Subject: Highlight Date: 9/3/2008 9:42:24 AM -07'00'

clientand
s/b
client and

Status
moverby Accepted 11/3/2008 9:02:39 PM

Number: 3 Author: HPQ-RElliott Subject: Note Date: 9/3/2008 9:42:24 AM -07'00'

Add "shows" sentence for consistency

Status
moverby Accepted 11/4/2008 10:42:43 AM

Number: 4 Author: Kevin_Marks Subject: Highlight Date: 8/25/2008 3:18:11 PM -07'00'

ACS), the
s/b
ACS), then the

Status
moverby Accepted 11/3/2008 9:02:49 PM

Number: 5 Author: HPQ-RElliott Subject: Note Date: 9/3/2008 9:42:24 AM -07'00'

Replace WRPROTECT, LBDATA, PBDATA, LOGICAL BLOCK ADDRESS, GROUP NUMBER, and NUMBER OF BLOCKS descriptions with:
As defined in WRITE SAME (10) (see 9.28)

Status
moverby Accepted 11/3/2008 9:02:54 PM

Number: 6 Author: HPQ-RElliott Subject: Note Date: 9/3/2008 9:42:24 AM -07'00'

For WRITE SAME (16), GROUP NUMBER goes after NUMBER OF LOGICAL BLOCKS

Status
moverby Accepted 11/3/2008 9:02:59 PM

Number: 7 Author: Kevin_Marks Subject: Highlight Date: 8/25/2008 3:18:52 PM -07'00'

zero, the
s/b
zero, then the

Status
moverby Accepted 11/3/2008 9:03:04 PM

Number: 8 Author: HPQ-RElliott Subject: Highlight Date: 9/3/2008 9:42:24 AM -07'00'

NUMBER OF BLOCKS
s/b
NUMBER OF LOGICAL BLOCKS

Status
moverby Accepted 11/3/2008 9:03:08 PM

10 Parameters for SAT implementations

10.1 Mode parameters

10.1.1 General information

SCSI mode parameters provide a mechanism to set operating parameters for SCSI devices and logical units. The MODE SENSE command obtains operating parameters while the MODE SELECT command sets operating parameters. This standard does not define the content of most operating parameters defined in mode pages due to lack of equivalent operations or features defined for ATA devices. The SATL emulates a SCSI device server for all MODE SENSE and MODE SELECT commands, and emulates the mode pages listed in 10.1.2.

The Mode Page Policy VPD page (see 10.3) should be implemented. If implemented, the MODE PAGE POLICY field in each mode page policy descriptor should be set to 00b (shared) for each mode page, and only one copy of mode page values should be maintained for all logical units within a target device (i.e., the MLUS bit is set to one in each mode page policy descriptor).

If the Mode Page Policy VPD page is not implemented, the SATL shall maintain shared mode pages for all I_T nexuses and shall share mode pages across all logical units within a target device.

10.1.2 Commonly used SCSI mode pages overview

This standard defines translations for the mode pages listed in table 65.

Table 65 — Summary of SCSI / ATA mode page mapping

SCSI mode page	Reference
Mode parameter header	10.1.3
Mode parameter block descriptor	10.1.4
Control (i.e., 0Ah)	10.1.5
Read-Write Error Recovery (i.e., 01h)	10.1.6
Caching (i.e., 08h)	10.1.7
Informational Exceptions Control (i.e., 1Ch)	10.1.8
All others	See SPC-3 and SBC-2 Unspecified (see 3.4.2)

Page: 110

Number: 1 Author: Kevin_Marks Subject: Highlight Date: 8/27/2008 11:52:55 AM -07'00'

10.1.1 General information

Status
moverby Rejected 11/4/2008 11:07:54 AM
Author: moverby Subject: Sticky Note Date: 11/3/2008 9:03:51 PM

Unknown what this comment is referring to

Number: 2 Author: HPQ-RElliott Subject: Highlight Date: 9/3/2008 9:42:24 AM -07'00'

while
s/b
and

Status
moverby Accepted 11/3/2008 9:03:59 PM

Number: 3 Author: Kevin_Marks Subject: Cross-Out Date: 8/25/2008 3:24:01 PM -07'00'

Status
moverby Accepted 11/3/2008 9:04:55 PM

Number: 4 Author: LSI-Penokie Subject: Highlight Date: 8/20/2008 10:58:47 AM -07'00'

This should be << set to 00b (i.e., shared) for >>

Status
moverby Accepted 11/3/2008 9:05:06 PM

Number: 5 Author: Kevin_Marks Subject: Highlight Date: 8/25/2008 3:23:49 PM -07'00'

(.i.e.,
s/b
(i.e.,

Status
moverby Accepted 11/3/2008 9:05:11 PM

Number: 6 Author: Kevin_Marks Subject: Highlight Date: 8/25/2008 3:24:58 PM -07'00'

See SPC-3 and SBC-2
s/b
See SPC-4 and SBC-3

Status
moverby Accepted 11/3/2008 9:05:15 PM

10.1.3 Mode parameter headers

Table 66 shows the fields in the mode parameter header for the MODE SELECT (6) command and the MODE SENSE (6) command.

Table 66 — Mode parameter header (6) fields

Field	Description or reference
MODE DATA LENGTH	Unspecified (see 3.4.2)
MEDIUM TYPE	This field should be set to 00h. When processing a MODE SELECT command, if the MEDIUM TYPE field is set to a value other than 00h, the SATL shall terminate the command with CHECK CONDITION status, with the sense key set to ILLEGAL REQUEST, and the additional sense code set to INVALID FIELD IN PARAMETER LIST.
DEVICE SPECIFIC PARAMETER	Unspecified (see 3.4.2) for the MODE SELECT command. For the MODE SENSE command, the DEVICE SPECIFIC PARAMETER field for direct-access block devices contains the DPOFUA bit and the WP bit (see SBC-2). A DPOFUA bit set to zero indicates that the SATL supports neither the DPO bit nor the FUA bit. A DPOFUA bit set to one indicates that the SATL supports both the DPO bit and the FUA bit. A WP bit set to zero indicates that the medium is not write-protected. A WP bit set to one indicates that the medium is write-protected.
BLOCK DESCRIPTOR LENGTH	This value is obtained by multiplying the number of block descriptors by eight (see SPC-3). The SATL shall support zero or one mode parameter block descriptors.

Table 67 shows the fields in the mode parameter header for the MODE SELECT (10) command and the MODE SENSE (10) command.

Table 67 — Mode parameter header (10) fields

Field	Description or reference
MODE DATA LENGTH	(see table 66)
MEDIUM TYPE	(see table 66)
DEVICE SPECIFIC PARAMETER	(see table 66)
LONGLBA	Describes the length of the block descriptors. a) If set to zero, the mode parameter block descriptor is eight bytes long. b) If set to one, the mode parameter block descriptor is 16 bytes long.
BLOCK DESCRIPTOR LENGTH	This field specifies (i.e., for a MODE SELECT command) or indicates (i.e., for a MODE SENSE command) the length of the mode parameter block descriptor. This value is obtained by multiplying the number of block descriptors by eight if LONGLBA bit is set to zero or by 16 if LONGLBA bit is set to one. The SATL shall support zero or one mode parameter block descriptors.

Page: 111

Number: 1 Author: LSI-Penokie Subject: Highlight Date: 8/20/2008 11:02:29 AM -07'00'

This << than 00h, then the>>

Status
moverby Accepted 11/3/2008 9:05:25 PM

Number: 2 Author: Kevin_Marks Subject: Highlight Date: 8/26/2008 1:41:37 PM -07'00'

SBC-2)
s/b
SBC-3)

Status
moverby Accepted 11/3/2008 9:05:30 PM

Number: 3 Author: Kevin_Marks Subject: Highlight Date: 8/26/2008 1:42:04 PM -07'00'

(see SPC-3).
s/b
(see SPC-4).

Status
moverby Accepted 11/3/2008 9:05:34 PM

Number: 4 Author: HPQ-RElliott Subject: Note Date: 9/3/2008 9:42:24 AM -07'00'

Delete whitespace below table 66

Status
moverby Accepted 11/3/2008 9:05:39 PM

Number: 5 Author: LSI-Penokie Subject: Highlight Date: 8/20/2008 11:07:09 AM -07'00'

This should be << block descriptors as follows: >>

Status
moverby Accepted 11/3/2008 9:05:46 PM

Number: 6 Author: LSI-Penokie Subject: Highlight Date: 8/20/2008 11:08:43 AM -07'00'

This should be << descriptor is eight bytes long; or >>

Status
moverby Accepted 11/3/2008 9:05:51 PM

10.1.4 Mode parameter block descriptor fields

The SATL may support the direct-access short LBA mode parameter block descriptor or the long LBA mode parameter block descriptor. Table 68 describes the translation of fields in the short LBA mode parameter block descriptor and the long LBA mode parameter block descriptor supported by the SATL.

Table 68 — Mode parameter block descriptor fields

Field	Description or reference
NUMBER OF BLOCKS[a]	Unspecified (see 3.4.2)
BLOCK LENGTH[a]	When processing a MODE SELECT command, if the SATL implements direct logical block mapping (see 3.1.35) and the value of the BLOCK LENGTH field is not the same as the ATA logical sector size (see 3.1.16), then the SATL shall terminate the command with CHECK CONDITION status with the sense key set to ILLEGAL REQUEST and the additional sense code set to INVALID FIELD IN PARAMETER LIST. If the SATL supports indirect logical block mapping this field is unspecified (see 3.4.2). When processing the MODE SENSE command, if the SATL implements direct logical block mapping (see 3.1.35) then the SATL shall return the same block length for the entire logical unit and the BLOCK LENGTH field shall contain the ATA logical sector size (see 3.1.16). Otherwise the BLOCK LENGTH field is unspecified (see 3.4.2).

[a] The values reported in the NUMBER OF BLOCKS field and the BLOCK LENGTH field shall be such that the logical unit capacity (see 3.1.50) is less than or equal to the ATA device capacity (see 3.1.10).

10.1.5 Control mode page

10.1.5.1 General translation

The Control mode page provides controls and information about behavior of the emulated SCSI device.

This page contains no comments

Table 69 describes the translation of the Control mode page for an ATA device.

Table 69 — Control mode page fields

Field	Changeable	Description or reference
PS	n/a	Unspecified (see 3.4.2)
SPF	n/a	Unspecified (see 3.4.2)
PAGE CODE	no	~~This field~~ shall be set to 0Ah.
PAGE LENGTH	no	Shall be set to 0Ah.
TST	no	Shall be set to 000b to indicate that a SCSI representation of an ATA device has one task set for all initiators
TMF_ONLY	no	Shall be set to zero[a]
D_SENSE	Unspecified	A SATL shall support a D_SENSE bit set to zero indicating that the logical unit returns the fixed sense data format, and a SATL may support a D_SENSE bit set to one indicating logical unit returns the descriptor sense data format. The SATL shall return sense data in the format indicated when returning CHECK CONDITION status for any commands except the ATA PASS-THROUGH (12) command and the ATA PASS-THROUGH (16) command. The SATL shall return sense data for a CHECK CONDITION status returned by an ATA PASS-THROUGH (12) command or an ATA PASS-THROUGH (16) command in the descriptor format.
GLTSD	Unspecified	Unspecified (see 3.4.2)
RLEC	no	Shall be set to zero
QUEUE ALGORITHM MODIFIER	no	The QUEUE ALGORITHM MODIFIER bit shall be set to one.
QERR	no	If the SATL supports the full task management model and ATA abort retry (see 3.1.7) of ATA queued commands (see 3.1.20) aborted by ATA collateral abort (see 3.1.8), the SATL shall set this field to 00b. Otherwise, the SATL shall set this field to 01b and comply with the unit attention condition requirements for a command completed with CHECK CONDITION status (see SPC-3).
TAS	no	Shall be set to zero
RAC	Unspecified	Unspecified (see 3.4.2)
UA_INTLCK_CTRL	no	Shall be set to 00b
SWP	no	Shall be set to zero
ATO	Unspecified	Unspecified (see 3.4.2)
AUTOLOAD MODE	no	Shall be set to 000b
BUSY TIMEOUT PERIOD	Unspecified	The default value shall be set to FFFFh. A SATL may support variable timeout periods and allow the application client to set a new value through a MODE SELECT operation for this mode page (see SPC-3).
EXTENDED SELF-TEST COMPLETION TIME	no	10.1.5.2

[a] SATL implementations shall not support ACA.

Page: 113

Number: 1 Author: HPQ-RElliott Subject: Highlight Date: 9/3/2008 9:42:24 AM -07'00'

n/a
s/b
no

for SPF

Status
moverby Accepted 11/3/2008 9:06:26 PM

Number: 2 Author: Kevin_Marks Subject: Highlight Date: 8/26/2008 2:02:03 PM -07'00'

n/a
s/b
no

Status
moverby Accepted 11/3/2008 9:06:23 PM

Number: 3 Author: HPQ-RElliott Subject: Highlight Date: 9/3/2008 9:42:24 AM -07'00'

Unspecified (see 3.4.2)
s/b
Shall be set to zero

for SPF

Status
moverby Accepted 11/3/2008 9:06:18 PM

Number: 4 Author: Kevin_Marks Subject: Highlight Date: 8/26/2008 2:02:22 PM -07'00'

Unspecified (see 3.4.2)
s/b
Shall be set to zero.

Status
moverby Accepted 11/3/2008 9:06:15 PM

Number: 5 Author: HPQ-RElliott Subject: Cross-Out Date: 9/3/2008 9:42:24 AM -07'00'

This field

Status
moverby Accepted 11/3/2008 9:06:34 PM

Number: 6 Author: HPQ-RElliott Subject: Note Date: 9/3/2008 9:42:24 AM -07'00'

TAS should be after ATO

Status
moverby Accepted 11/3/2008 9:06:39 PM

Number: 7 Author: HPQ-RElliott Subject: Highlight Date: 9/3/2008 9:42:24 AM -07'00'

UA_INTLCK_CTRL
no
Shall be set to 00b

I think this should be Unspecified (see 3.4.2). SATL should be allowed to implement unit attention interlock if it wants.

Status
moverby Rejected 10/20/2008 5:32:13 PM -07'00'

Author: moverby Subject: Sticky Note Date: 10/20/2008 5:32:09 PM -07'00'

Deferred to SAT-3.

Number: 8 Author: Kevin_Marks Subject: Highlight Date: 8/26/2008 1:49:48 PM -07'00'

(see SPC-3).
s/b
(see SPC-4).

Status
moverby Accepted 11/3/2008 9:06:43 PM

10.1.5.2 Extended self-test completion time

A SATL implementation shall set the EXTENDED SELF-TEST COMPLETION TIME field to 0000h unless the ATA device supports SMART self-tests and the SATL supports a value other than 000b for the SELF-TEST CODE field for a SEND DIAGNOSTIC command. The SATL determines if the ATA device supports SMART self-test by examining the value of ATA IDENTIFY DEVICE data word 84 bit 1. If ATA IDENTIFY DEVICE data word 84 bit 1 is set to one, the ATA device supports the SMART self-test and shall retrieve the ATA device SMART data structure from the ATA device by sending an ATA SMART READ DATA command to the ATA device. The SATL may cache this information for future use when a subsequent MODE SENSE command requests the control mode page. If the SATL caches such data, the SATL may reference the cached copy instead of sending a new ATA SMART READ DATA command. Then the SATL shall set the EXTENDED SELF-TEST COMPLETION TIME field as follows:

1) If byte 373 of the returned SMART data structure is not set to FFh, the SATL shall set the EXTENDED SELF-TEST COMPLETION TIME field to a value that is 60 times the contents of byte 373; or
2) If byte 373 of the returned SMART data structure is set to FFh, the SATL shall set the EXTENDED SELF-TEST COMPLETION TIME field to a value that is the lesser of FFFFh or the result of the following formula:

   EXTENDED SELF-TEST COMPLETION TIME field = ((w x 256) + z) x 60;

   where:

   w is the contents of byte 376; ~~and~~

   z is the contents of byte 375.

10.1.6 Read-Write Error Recovery mode page

The Read-Write Error Recovery mode page specifies the error recovery parameters the SATL shall use during a command that performs a read or write operation to the medium of the ATA device (see SBC-2). Table 70 defines the translation for the Read-Write Error Recovery mode page.

Table 70 — Read-Write Error Recovery mode page fields

Field	Changeable	Description or reference
PS	n/a	Unspecified (see 3.4.2)
PAGE CODE	no	Shall be set to 01h
PAGE LENGTH	no	Shall be set to 0Ah
AWRE	no	Shall be set to one (see SBC-2)
ARRE	no	Shall be set to zero (see SBC-2)
TB	n/a	Unspecified (see 3.4.2)
RC	no	Shall be set to zero (see SBC-2)
EER	no	Shall be set to zero (see SBC-2)
PER	no	Shall be set to zero (see SBC-2)
DTE	no	Shall be set to zero (see SBC-2)
DCR	no	Shall be set to zero (see SBC-2)
READ RETRY COUNT	n/a	Unspecified (see 3.4.2)
WRITE RETRY COUNT	n/a	Unspecified (see 3.4.2)
RECOVERY TIME LIMIT	no	Shall be set to 00h (see SBC-2)

Page: 114

Number: 1 Author: Kevin_Marks Subject: Highlight Date: 8/26/2008 1:53:06 PM -07'00'
one, the
s/b
one, then the

Status
moverby Accepted 10/20/2008 1:02:44 PM -07'00'

Number: 2 Author: LSI-Penokie Subject: Highlight Date: 8/20/2008 11:19:56 AM -07'00'
I do not know what the information that should be cached the cache this information

Status
moverby Accepted 10/20/2008 12:41:11 PM -07'00'

Author: moverby Subject: Sticky Note Date: 10/20/2008 12:40:52 PM -07'00'
cache the IDENTIFY DEVICE DATA

Number: 3 Author: Kevin_Marks Subject: Highlight Date: 8/26/2008 1:53:55 PM -07'00'
data, the
s/b
data, then the

Status
moverby Accepted 10/20/2008 1:02:53 PM -07'00'

Number: 4 Author: LSI-Penokie Subject: Highlight Date: 8/20/2008 11:12:27 AM -07'00'
This should be << command, then the SATL shall >>

Status
moverby Accepted 10/20/2008 1:03:28 PM -07'00'

Number: 5 Author: HPQ-RElliott Subject: Cross-Out Date: 9/3/2008 9:42:24 AM -07'00'
Delete
;

Status
moverby Accepted 11/4/2008 10:43:57 AM

Author: moverby Subject: Sticky Note Date: 11/3/2008 9:07:23 PM
This was discussed previously and I was requested to put the ; in. Should it stay or go?

Author: moverby Subject: Sticky Note Date: 11/4/2008 10:43:54 AM
George agreed to take it out.

Number: 6 Author: HPQ-RElliott Subject: Cross-Out Date: 9/3/2008 9:42:24 AM -07'00'
Delete
; and

Status
moverby Rejected 11/4/2008 10:45:22 AM

Author: moverby Subject: Sticky Note Date: 11/4/2008 10:45:13 AM
George says style guide says to keep

Number: 7 Author: HPQ-RElliott Subject: Cross-Out Date: 9/3/2008 9:42:24 AM -07'00'
Delete
.

Status
moverby Rejected 11/4/2008 10:45:54 AM

Author: moverby Subject: Sticky Note Date: 11/4/2008 10:45:49 AM
George says style guide keeps this (6.10)

Number: 8 Author: Kevin_Marks Subject: Highlight Date: 8/26/2008 1:58:50 PM -07'00'
(see SBC-2).
s/b
(see SBC-3).

Status
moverby Accepted 11/3/2008 9:07:43 PM

Number: 9 Author: HPQ-RElliott Subject: Note Date: 9/3/2008 9:42:24 AM -07'00'
Delete blank row in table 70, or (more likely) add the missing SPF row:

SPF no Shall be set to zero (see SBC-3)

Status
moverby Accepted 10/20/2008 1:04:05 PM -07'00'

Number: 10 Author: Kevin_Marks Subject: Sticky Note Date: 8/26/2008 2:00:24 PM -07'00'
add row for
SPF no Shall be set to zero.

Status
moverby Accepted 10/20/2008 1:04:15 PM -07'00'

Number: 11 Author: Kevin_Marks Subject: Highlight Date: 8/26/2008 1:57:03 PM -07'00'
(see SBC-2)
s/b
(see SBC-3)

Status
moverby Accepted 11/3/2008 9:07:46 PM

Number: 12 Author: Kevin_Marks Subject: Highlight Date: 8/26/2008 1:57:14 PM -07'00'
(see SBC-2)
s/b

Comments from page 114 continued on next page

10.1.5.2 Extended self-test completion time

A SATL implementation shall set the EXTENDED SELF-TEST COMPLETION TIME field to 0000h unless the ATA device supports SMART self-tests and the SATL supports a value other than 000b for the SELF-TEST CODE field for a SEND DIAGNOSTIC command. The SATL determines if the ATA device supports SMART self-test by examining the value of ATA IDENTIFY DEVICE data word 84 bit 1. If ATA IDENTIFY DEVICE data word 84 bit 1 is set to one, the ATA device supports the SMART self-test and shall retrieve the ATA device SMART data structure from the ATA device by sending an ATA SMART READ DATA command to the ATA device. The SATL may cache this information for future use when a subsequent MODE SENSE command requests the control mode page. If the SATL caches such data, the SATL may reference the cached copy instead of sending a new ATA SMART READ DATA command. Then the SATL shall set the EXTENDED SELF-TEST COMPLETION TIME field as follows:

1) If byte 373 of the returned SMART data structure is not set to FFh, the SATL shall set the EXTENDED SELF-TEST COMPLETION TIME field to a value that is 60 times the contents of byte 373; or
2) If byte 373 of the returned SMART data structure is set to FFh, the SATL shall set the EXTENDED SELF-TEST COMPLETION TIME field to a value that is the lesser of FFFFh or the result of the following formula:

   EXTENDED SELF-TEST COMPLETION TIME field = ((w x 256) + z) x 60~~;~~

   where:

   w is the contents of byte 376~~; and~~

   z is the contents of byte 375~~.~~

10.1.6 Read-Write Error Recovery mode page

The Read-Write Error Recovery mode page specifies the error recovery parameters the SATL shall use during a command that performs a read or write operation to the medium of the ATA device (see SBC-2). Table 70 defines the translation for the Read-Write Error Recovery mode page.

Table 70 — Read-Write Error Recovery mode page fields

Field	Changeable	Description or reference
PS	n/a	Unspecified (see 3.4.2)
PAGE CODE	no	Shall be set to 01h
PAGE LENGTH	no	Shall be set to 0Ah
AWRE	no	Shall be set to one (see SBC-2)
ARRE	no	Shall be set to zero (see SBC-2)
TB	n/a	Unspecified (see 3.4.2)
RC	no	Shall be set to zero [13] (see SBC-2)
EER	no	Shall be set to zero [14] (see SBC-2)
PER	no	Shall be set to zero [15] (see SBC-2)
DTE	no	Shall be set to zero [16] (see SBC-2)
DCR	no	Shall be set to zero [17] (see SBC-2)
READ RETRY COUNT	n/a	Unspecified (see 3.4.2)
WRITE RETRY COUNT	n/a	Unspecified (see 3.4.2)
RECOVERY TIME LIMIT	no	Shall be set to 00h [18] [19] (see SBC-2)

(see SBC-3)

Status
moverby Accepted 11/3/2008 6:18:22 PM

Number: 13 Author: Kevin_Marks Subject: Highlight Date: 8/26/2008 1:57:28 PM -07'00'

(see SBC-2)
s/b
(see SBC-3)

Status
moverby Accepted 11/3/2008 6:18:25 PM

Number: 14 Author: Kevin_Marks Subject: Highlight Date: 8/26/2008 1:57:46 PM -07'00'

(see SBC-2)
s/b
(see SBC-3)

Status
moverby Accepted 11/3/2008 6:18:29 PM

Number: 15 Author: Kevin_Marks Subject: Highlight Date: 8/26/2008 1:57:56 PM -07'00'

(see SBC-2)
s/b
(see SBC-3)

Status
moverby Accepted 11/3/2008 6:18:32 PM

Number: 16 Author: Kevin_Marks Subject: Highlight Date: 8/26/2008 1:58:08 PM -07'00'

(see SBC-2)
s/b
(see SBC-3)

Status
moverby Accepted 11/3/2008 6:18:34 PM

Number: 17 Author: Kevin_Marks Subject: Highlight Date: 8/26/2008 1:58:17 PM -07'00'

(see SBC-2)
s/b
(see SBC-3)

Status
moverby Accepted 11/3/2008 6:18:48 PM

Number: 18 Author: HPQ-RElliott Subject: Highlight Date: 9/3/2008 9:42:24 AM -07'00'

00h
s/b
0000h

Status
moverby Accepted 11/3/2008 6:18:45 PM

Number: 19 Author: Kevin_Marks Subject: Highlight Date: 8/26/2008 1:58:27 PM -07'00'

(see SBC-2)
s/b
(see SBC-3)

Status
moverby Accepted 11/3/2008 6:18:39 PM

10.1.7 Caching mode page

The Caching mode page defines parameters that affect the behavior of the cache in the ATA device.

Table 71 shows the translation of fields in the Caching mode page.

Table 71 — Caching mode page fields (part 1 of 2)

Field	Changeable	Description or reference
PS	n/a	Unspecified (see 3.4.2)
PAGE CODE	no	Shall be set to 08h
PAGE LENGTH	no	Shall be set to 12h
IC	no	Shall be set to zero
ABPF	no	Shall be set to zero
CAP	no	Shall be set to zero
DISC	no	Shall be set to zero
SIZE	no	Shall be set to zero
WCE	yes	When processing a MODE SENSE command, the SATL shall determine if the write cache of the ATA device is enabled from the ATA IDENTIFY DEVICE data word 85 bit 5. If the write cache of the ATA device is enabled the SATL shall return a value of one for the WCE bit. If the write cache of the ATA device is disabled the SATL shall return a value of zero for the WCE bit. When processing a MODE SELECT command: a) if the WCE bit is set to zero, then the SATL shall disable the write cache of the ATA device by issuing an ATA SET FEATURES – Disable write cache command (i.e., with the Features register set to 82h); or b) if the WCE bit is set to one, then the SATL shall enable the write cache of the ATA device by issuing an ATA SET FEATURES – Enable write cache command (i.e., with the Features register set to 02h).
MF	no	Shall be set to zero
RCD	no	Shall be set to zero
DEMAND READ RETENTION PRIORITY	no	Shall be set to zero
WRITE RETENTION PRIORITY	no	Shall be set to zero
DISABLE PRE-FETCH TRANSFER LENGTH	no	Shall be set to zero
MINIMUM PRE-FETCH	no	Shall be set to zero
MAXIMUM PRE-FETCH	no	Shall be set to zero
MAXIMUM PRE-FETCH CEILING	no	Shall be set to zero
FSW	no	Shall be set to zero
LBCSS	no	Shall be set to zero

Number: 1 Author: Kevin_Marks Subject: Sticky Note Date: 10/20/2008 1:04:58 PM -07'00'

add row for
SPF no Shall be set to zero.

Status
moverby Accepted 10/20/2008 1:05:02 PM -07'00'

Number: 2 Author: HPQ-RElliott Subject: Note Date: 9/3/2008 9:42:24 AM -07'00'

Add SPF row

SPF no Shall be set to zero

Status
moverby Accepted 10/20/2008 1:04:54 PM -07'00'

Table 71 — Caching mode page fields (part 2 of 2)

Field	Changeable	Description or reference
DRA	yes	When processing a MODE SENSE command, the SATL shall determine if the ATA device look-ahead is enabled from the ATA IDENTIFY DEVICE data word 85 bit 6. If the look-ahead is enabled the SATL shall return a value of zero for the DRA bit. If the look-ahead is disabled the SATL shall return a value of one for the DRA bit. When processing a MODE SELECT command,[1] a) if the DRA bit is set to zero, the SATL shall enable the ATA device read look-ahead feature by issuing an ATA SET FEATURES – Enable read look-ahead feature command (i.e., with the Features register set to AAh); or b) if the DRA bit is set to one, the SATL shall disable the ATA device read look-ahead feature by issuing an ATA SET FEATURES – Disable read look-ahead feature command (i.e., with the Features register set to 55h).
NV_DIS	no	Shall be[2] set zero
NUMBER OF CACHE SEGMENTS	no	Shall be[3] set zero
CACHE SEGMENT SIZE	no	Shall be[4] set zero

Page: 116

Number: 1 Author: HPQ-RElliott Subject: Highlight Date: 9/3/2008 9:42:24 AM -07'00'

,
s/b
;

Status
moverby Accepted 10/20/2008 1:05:23 PM -07'00'
Author: moverby Subject: Sticky Note Date: 10/20/2008 1:05:20 PM -07'00'
Actually replace with a :

Number: 2 Author: HPQ-RElliott Subject: Highlight Date: 9/3/2008 9:42:24 AM -07'00'

set zero
s/b
set to zero

Status
moverby Accepted 10/20/2008 1:05:28 PM -07'00'

Number: 3 Author: HPQ-RElliott Subject: Highlight Date: 9/3/2008 9:42:24 AM -07'00'

set zero
s/b
set to zero

Status
moverby Accepted 10/20/2008 1:05:32 PM -07'00'

Number: 4 Author: HPQ-RElliott Subject: Highlight Date: 9/3/2008 9:42:24 AM -07'00'

set zero
s/b
set to zero

Status
moverby Accepted 10/20/2008 1:05:36 PM -07'00'

10.1.8 Informational Exceptions Control mode page

10.1.8.1 Informational Exceptions Control mode page overview

The Informational Exceptions Control mode page defines the methods used by the SATL to control the reporting and the operations of specific informational exception conditions. The Informational Exceptions Control mode page applies to informational exceptions that return an additional sense code of FAILURE PREDICTION THRESHOLD EXCEEDED or WARNING to the application client (see SPC-3).

Table 72 shows the translation of fields in the Informational Exceptions Control mode page.

Table 72 — Informational Exceptions Control mode page fields

Field	Changeable	Description or reference
PS	n/a	Unspecified (see 3.4.2)
SPF	no	Shall be set to zero
PAGE CODE	no	Shall be set to 1Ch. The SATL shall determine if the ATA SMART feature set is supported from the ATA IDENTIFY DEVICE data word 82 bit 0. If the ATA SMART feature set is not supported, then the SATL shall terminate the command with CHECK CONDITION status with the sense key set to ILLEGAL REQUEST and the additional sense code set to INVALID FIELD IN CDB for a MODE SENSE command or INVALID FIELD IN PARAMETER LIST for a MODE SELECT command.
PAGE LENGTH	no	Shall be set to 0Ah
PERF	no	Shall be set to zero
EBF	n/a	Unspecified (see 3.4.2)
EWASC	n/a	Unspecified (see 3.4.2)
DEXCPT	yes	Unspecified (see 3.4.2)
TEST	no	Shall be set to zero
LOGERR	n/a	Unspecified (see 3.4.2)
MRIE	no[a]	Should be set to 6h (see 10.1.8.2).
INTERVAL TIMER	n/a	Unspecified (see 3.4.2)
REPORT COUNT	n/a	Unspecified (see 3.4.2)

[a] The MRIE field should be set to 6h, however if the SATL supports other settings of the MRIE field, the SATL should permit the MRIE field to be changeable.

10.1.8.2 Method of reporting informational exceptions (MRIE)

The SATL should support 6h. Support for any other value is unspecified (see 3.4.2).

When the MRIE field is set to 6h and the SATL receives a REQUEST SENSE command, the SATL shall send an ATA SMART RETURN STATUS command to the ATA device and return status to the application client as defined in SPC-3 (see 10.2.5.2). If the result of the ATA SMART RETURN STATUS command indicates a threshold exceeded condition the SATL shall set the additional sense code to HARDWARE IMPENDING FAILURE GENERAL HARD DRIVE FAILURE.

10.1.9 Power Condition Mode Pages

10.1.9.1 Power Condition Mode Pages Overview

~~The SCSI START STOP UNIT command explicitly changes power condition.~~ The Power Condition mode pages allow changing of the ATA APM mode setting, and the ATA STANDBY timer value. They also provide information about the current power condition settings.

Page: 117

Number: 1 Author: Kevin_Marks Subject: Highlight Date: 8/26/2008 2:06:23 PM -07'00'

(see SPC-3).
s/b
(see SPC-4).

Status
moverby Accepted 11/3/2008 6:18:53 PM

Number: 2 Author: HPQ-RElliott Subject: Note Date: 9/3/2008 9:42:24 AM -07'00'

Add EBACKERR bit above LOGERR

Status
moverby Accepted 11/4/2008 2:33:45 PM

Author: moverby Subject: Sticky Note Date: 11/3/2008 6:19:11 PM

With what translation? Unspecified?

Author: moverby Subject: Sticky Note Date: 11/4/2008 2:33:42 PM

Translation of EBACKERR is n/a, Unspecified.

Number: 3 Author: Kevin_Marks Subject: Highlight Date: 8/26/2008 2:11:31 PM -07'00'

SPC-3
s/b
SPC-4

Status
moverby Accepted 11/3/2008 6:19:14 PM

Number: 4 Author: LSI-Penokie Subject: Highlight Date: 8/20/2008 1:18:26 PM -07'00'

This should be << exceeded condition, then the SATL shall >>

Status
moverby Accepted 10/20/2008 1:06:10 PM -07'00'

Number: 5 Author: HPQ-RElliott Subject: Highlight Date: 9/3/2008 9:42:24 AM -07'00'

Mode Pages
s/b
lowercase

Status
moverby Accepted 10/20/2008 1:06:15 PM -07'00'

Number: 6 Author: HPQ-RElliott Subject: Highlight Date: 9/3/2008 9:42:24 AM -07'00'

Mode Pages Overview
s/b
lowercase

Status
moverby Accepted 10/20/2008 1:06:20 PM -07'00'

Number: 7 Author: LSI-Penokie Subject: Cross-Out Date: 8/20/2008 1:22:03 PM -07'00'

This has to be deleted or rewritten. I say delete as it has nothing to do with the mode page.

Status
moverby Accepted 10/20/2008 1:06:34 PM -07'00'

Author: moverby Subject: Sticky Note Date: 10/20/2008 1:06:30 PM -07'00'

Accepted to delete.

10.1.9.2 ATA Power Condition Mode Page

The ATA Power Condition Mode page is ATA specific and defined in 12.3.3.

10.1.9.3 Power Condition Mode Page

The Power Condition mode page translation (see table 73) allows setting and examining the ATA STANDBY timer value (see ATA8-ACS). Values in the STANDBY TIMER field for the MODE SENSE command shall be translated as defined in table 74. Values in the STANDBY TIMER field for the MODE SELECT command shall be translated as defined in table 75.

Page: 118

Number: 1 Author: HPQ-RElliott Subject: Highlight Date: 9/3/2008 9:42:24 AM -07'00'

Mode Page
s/b
lowercase

Status
moverby Accepted 10/20/2008 1:06:39 PM -07'00'

Number: 2 Author: HPQ-RElliott Subject: Highlight Date: 9/3/2008 9:42:24 AM -07'00'

Mode Page
s/b
lowercase

Status
moverby Accepted 10/20/2008 1:06:44 PM -07'00'

Number: 3 Author: HPQ-RElliott Subject: Note Date: 9/3/2008 9:42:24 AM -07'00'

Move table 74 intro paragraph directly above table 74.

Move table 75 intro paragraph directly above table 75.

Status
moverby Accepted 11/3/2008 6:19:28 PM

Table 73 — Power Condition Mode Page Fields

Field	Changeable	Description or Reference
PS	n/a	Unspecified (see 3.4.2)
SPF	No	Shall be set to zero
PAGE CODE	No	Shall be set to 1Ah
PAGE LENGTH	No	Shall be seto to 0Ah
IDLE	No	When processing a MODE SENSE command, the IDLE bit shall be returned as zero. When processing a MODE SELECT command, if the IDLE bit is set to one, then the SATL shall terminate the command with CHECK CONDITION status, with the sense key set to ILLEGAL REQUEST and the additional sense code set to INVALID FIELD IN PARAMETER LIST.
STANDBY	Yes	When processing a MODE SENSE command, if ATA IDENTIFY DEVICE data word 49, bit 13 is set to one, the STANDBY bit shall be returned as one. If ATA IDENTIFY DEVICE data word 49, bit 13 is set to zero, the STANDBY bit shall be returned as zero. When processing a MODE SELECT command, if the STANDBY bit is set to one, then: 1) If the ATA IDENTIFY DEVICE data word 49, bit 13 is set to zero, the SATL shall terminate the command with CHECK CONDITION status, with the sense key set to ILLEGAL REQUEST and the additional sense code set to INVALID FIELD IN PARAMETER LIST; 2) The SATL shall send the ATA STANDBY command to the ATA device, and the value in the STANDBY CONDITION TIMER field shall be translated as defined in table 75 and used to set the Timer period value (TPV) (i.e., ATA Count field).
IDLE CONDITION TIMER	No	When processing a MODE SENSE command, this field shall be returned as zero. When processing a MODE SELECT command, this field shall be ignored.
STANDBY CONDITION TIMER	Yes	When processing a MODE SENSE command: If the ATA IDENTIFY DEVICE data word 49, bit 13 is set to zero, then the STANDBY CONDITION TIMER shall return zero. If the ATA IDENTIFY DEVICE data word 49, bit 13 is set to one, then the ATA standby timer value shall be translated as defined in table 74 and returned in this field. When processing a MODE SELECT command: If STANDBY is set to one, then the value in this field shall be translated as defined in table 75 and used to set the Timer period value (TPV) (i.e., COUNT field). The SATL may retain this value for return when processing a MODE SENSE command.

Page: 119

Number: 1 Author: HPQ-RElliott Subject: Highlight Date: 9/3/2008 9:42:24 AM -07'00'

Mode Page Fields
s/b
lowercase

Status
moverby Accepted 10/20/2008 1:07:04 PM -07'00'

Number: 2 Author: HPQ-RElliott Subject: Highlight Date: 9/3/2008 9:42:24 AM -07'00'

Changable
s/b
Changeable

Status
moverby Accepted 10/20/2008 1:07:08 PM -07'00'

Number: 3 Author: Kevin_Marks Subject: Sticky Note Date: 8/26/2008 2:25:11 PM -07'00'

Change all Yes/No in changeably column of Table 73 to yes/no to match other tables.

Status
moverby Accepted 10/20/2008 1:07:35 PM -07'00'

Author: moverby Subject: Sticky Note Date: 10/20/2008 1:07:32 PM -07'00'

Will make all lower case

Number: 4 Author: HPQ-RElliott Subject: Highlight Date: 9/3/2008 9:42:24 AM -07'00'

seto
s/b
set

Status
moverby Accepted 10/20/2008 1:07:42 PM -07'00'

Number: 5 Author: Kevin_Marks Subject: Highlight Date: 8/26/2008 2:25:44 PM -07'00'

one, the
s/b
one, then the

Status
moverby Accepted 10/20/2008 1:07:57 PM -07'00'

Number: 6 Author: Kevin_Marks Subject: Highlight Date: 8/26/2008 2:22:16 PM -07'00'

STANDBY
s/b
in small CAPS

Status
moverby Accepted 10/20/2008 1:07:53 PM -07'00'

Number: 7 Author: Kevin_Marks Subject: Highlight Date: 8/26/2008 2:25:59 PM -07'00'

zero, the
s/b
zero, then the

Status
moverby Accepted 10/20/2008 1:08:01 PM -07'00'

Number: 8 Author: Kevin_Marks Subject: Highlight Date: 8/26/2008 2:22:51 PM -07'00'

STANDBY
s/b
in small CAPS

Status
moverby Accepted 10/20/2008 1:08:04 PM -07'00'

Number: 9 Author: Kevin_Marks Subject: Highlight Date: 8/26/2008 2:23:31 PM -07'00'

STANDBY
s/b
in small CAPS

Status
moverby Accepted 10/20/2008 1:08:07 PM -07'00'

Number: 10 Author: Kevin_Marks Subject: Highlight Date: 8/26/2008 2:27:13 PM -07'00'

zero, the
s/b
zero, then the

Status
moverby Accepted 10/20/2008 1:08:11 PM -07'00'

Number: 11 Author: LSI-Penokie Subject: Highlight Date: 8/20/2008 1:42:27 PM -07'00'

This should be << PARAMETER LIST; and >>

Status
moverby Accepted 10/20/2008 1:08:22 PM -07'00'

Number: 12 Author: Kevin_Marks Subject: Highlight Date: 8/26/2008 2:26:47 PM -07'00'

LIST;
s/b
LIST; and

Status
moverby Accepted 10/20/2008 1:08:27 PM -07'00'

Number: 13 Author: Kevin_Marks Subject: Cross-Out Date: 8/26/2008 2:27:34 PM -07'00'

Status

Comments from page 119 continued on next page

Table 73 — Power Condition Mode Page Fields

Field	Changeable	Description or Reference
PS	n/a	Unspecified (see 3.4.2)
SPF	No	Shall be set to zero
PAGE CODE	No	Shall be set to 1Ah
PAGE LENGTH	No	Shall be seto to 0Ah
IDLE	No	When processing a MODE SENSE command, the IDLE bit shall be returned as zero. When processing a MODE SELECT command, if the IDLE bit is set to one, then the SATL shall terminate the command with CHECK CONDITION status, with the sense key set to ILLEGAL REQUEST and the additional sense code set to INVALID FIELD IN PARAMETER LIST.
STANDBY	Yes	When processing a MODE SENSE command, if ATA IDENTIFY DEVICE data word 49, bit 13 is set to one, the STANDBY bit shall be returned as one. If ATA IDENTIFY DEVICE data word 49, bit 13 is set to zero, the STANDBY bit shall be returned as zero. When processing a MODE SELECT command, if the STANDBY bit is set to one, then: 1) If the ATA IDENTIFY DEVICE data word 49, bit 13 is set to zero, the SATL shall terminate the command with CHECK CONDITION status, with the sense key set to ILLEGAL REQUEST and the additional sense code set to INVALID FIELD IN PARAMETER LIST; 2) The SATL shall send the ATA STANDBY command to the ATA device, and the value in the STANDBY CONDITION TIMER field shall be translated as defined in table 75 and used to set the Timer period value (TPV) (i.e., ATA Count field).
IDLE CONDITION TIMER	No	When processing a MODE SENSE command, this field shall be returned as zero. When processing a MODE SELECT command, this field shall be ignored.
STANDBY CONDITION TIMER	Yes	When processing a MODE SENSE command: If the ATA IDENTIFY DEVICE data word 49, bit 13 is set to zero, then the STANDBY CONDITION TIMER shall return zero. If the ATA IDENTIFY DEVICE data word 49, bit 13 is set to one, then the ATA standby timer value shall be translated as defined in table 74 and returned in this field. When processing a MODE SELECT command: If STANDBY is set to one, then the value in this field shall be translated as defined in table 75 and used to set the Timer period value (TPV) (i.e., COUNT field). The SATL may retain this value for return when processing a MODE SENSE command.

moverby Accepted 10/20/2008 1:08:34 PM -07'00'

Number: 14 Author: HPQ-RElliott Subject: Highlight Date: 9/3/2008 9:42:24 AM -07'00'

STANDBY CONDITION TIMER field
s/b
smallcaps

Status
moverby Accepted 10/20/2008 1:08:43 PM -07'00'

Number: 15 Author: Kevin_Marks Subject: Highlight Date: 8/26/2008 2:28:07 PM -07'00'

STANDBY CONDITION TIMER
s/b
in small CAPS

Status
moverby Accepted 10/20/2008 1:08:39 PM -07'00'

Number: 16 Author: HPQ-RElliott Subject: Highlight Date: 9/3/2008 9:42:24 AM -07'00'

:
s/b
,

and join the paragraphs

Status
moverby Accepted 10/20/2008 1:08:54 PM -07'00'

Number: 17 Author: HPQ-RElliott Subject: Highlight Date: 9/3/2008 9:42:24 AM -07'00'

the STANDBY CONDITION TIMER shall return zero
s/b
this field shall be set to zero

Status
moverby Accepted 11/3/2008 6:19:42 PM

Number: 18 Author: Kevin_Marks Subject: Highlight Date: 8/26/2008 6:03:51 PM -07'00'

STANDBY CONDITION TIMER
s/b
in small CAPS and add field

Status
moverby Rejected 11/3/2008 6:19:57 PM

Author: moverby Subject: Sticky Note Date: 11/3/2008 6:19:54 PM

Rejected in favor of Rob Elliot comment.

Number: 19 Author: HPQ-RElliott Subject: Highlight Date: 9/3/2008 9:42:24 AM -07'00'

:
s/b
,

and join the paragraphs

Status
moverby Accepted 11/4/2008 10:49:07 AM

Number: 20 Author: Kevin_Marks Subject: Highlight Date: 8/26/2008 6:04:41 PM -07'00'

STANDBY
s/b
in small CAPS and add bit

Status
moverby Accepted 11/3/2008 6:20:27 PM

Number: 21 Author: HPQ-RElliott Subject: Highlight Date: 9/3/2008 9:42:24 AM -07'00'

STANDBY
s/b
the STANDBY bit

Status
moverby Accepted 11/3/2008 6:20:31 PM

Number: 22 Author: Kevin_Marks Subject: Highlight Date: 8/26/2008 6:05:10 PM -07'00'

COUNT
s/b
ATA Count

Status
moverby Accepted 11/3/2008 6:20:36 PM

Number: 23 Author: HPQ-RElliott Subject: Highlight Date: 9/3/2008 9:42:24 AM -07'00'

COUNT field
s/b
the Count field

Status
moverby Accepted 11/3/2008 6:23:02 PM

Author: moverby Subject: Sticky Note Date: 11/3/2008 6:22:59 PM

s/b the ATA Count field

Table 74 — MODE SENSE STANDBY TIMER field translation

ATA Count field	~~Power Condition mode page~~ STANDBY CONDITION TIMER field
01h - F0h	ATA Count field x 50
FCh (i.e., 21 minutes)	12 600
FFh (i.e., 21 minutes 15 seconds)	12 750
F1h - FBh (i.e., 30 minutes to 330 minutes)	(ATA Count field - 240) x 18 000
FDh (i.e., 8 hours to 12 hours)	432 000
Not retained by the SATL	FFFF_FFFFh
~~Note: All times are approximate~~	

Table 75 — MODE SELECT STANDBY TIMER field translation

~~Power Condition Mode Page~~ STANDBY CONDITION TIMER field	ATA Count field
1 to 12 000 (i.e., 0.001 second to 1 200 seconds)	INT((z - 1) / 50) + 1[a]
12 001 to 12 600	FCh (i.e., 21 minutes)
12 601 to 12 750	FFh (i.e., 21 minutes 15 seconds)
12 751 to 17 999	1h
18 000 to 198 000 (i.e., 30 minutes to 330 minutes)	INT(z / 18 000) + 240[a]
All other values	FDh (i.e., 8 hours to 12 hours)

Key:

z = Contents of the power condition mode page STANDBY CONDITION TIMER field.

[a] INT() is the integer result of the specified division operation with any decimal remainder discarded.

10.2 Log pages

10.2.1 Log pages overview

This standard defines translations for the log pages listed in table 76.

Table 76 — Summary of SCSI / ATA log page mapping

SCSI log page	Reference
Application Client (i.e., page code 0Fh)	10.2.2
Supported Log Pages (i.e., page code 00h)	10.2.3
Self-Test Results (i.e., page code 10h)	10.2.4
Informational Exceptions (i.e., page code 2Fh)	10.2.5
All others	Unspecified (see 3.4.2)

Page: 120

Number: 1 Author: Kevin_Marks Subject: Cross-Out Date: 8/26/2008 6:05:55 PM -07'00'

Status
moverby Accepted 11/3/2008 9:08:21 PM

Number: 2 Author: HPQ-RElliott Subject: Note Date: 9/3/2008 9:42:24 AM -07'00'

I recommend sorting table 74 by the left column's values, not the right column's values

Status
moverby Accepted 11/4/2008 10:56:01 AM

Author: moverby Subject: Sticky Note Date: 11/3/2008 9:09:20 PM

The intent was to have this sorted in order for ascending length of time.

Author: moverby Subject: Sticky Note Date: 11/4/2008 10:55:57 AM

Add all other values row - unspecified. Add a column with time values (move i.e.'s into that column). Sort ATA Count in ascending order.

Number: 3 Author: Kevin_Marks Subject: Cross-Out Date: 8/26/2008 6:06:21 PM -07'00'

Status
moverby Accepted 11/3/2008 9:09:32 PM

Number: 4 Author: Kevin_Marks Subject: Cross-Out Date: 8/26/2008 6:06:37 PM -07'00'

Status
moverby Accepted 11/3/2008 9:09:43 PM

Number: 5 Author: HPQ-RElliott Subject: Highlight Date: 9/3/2008 9:42:24 AM -07'00'

Mode Page
s/b
lowercase

Status
moverby Accepted 11/3/2008 9:09:48 PM

Number: 6 Author: HPQ-RElliott Subject: Note Date: 9/3/2008 9:42:24 AM -07'00'

Show what happens to value 0 in table 75

Status
moverby Accepted 11/3/2008 9:31:55 PM

Author: moverby Subject: Sticky Note Date: 11/3/2008 9:31:51 PM

SATL immediately issues STANDBY IMMEDIATE

Number: 7 Author: HPQ-RElliott Subject: Highlight Date: 9/3/2008 9:42:24 AM -07'00'

After
F1h

add (i.e., 30 minutes)

[or whatever is correct]

Status
moverby Accepted 11/3/2008 9:17:41 PM

Number: 8 Author: Kevin_Marks Subject: Sticky Note Date: 11/4/2008 10:56:35 AM

Wondering if it would be better to remove z and place the STANDBY CONDITON TIMER field directly in equation

Status
moverby Accepted 11/4/2008 10:59:28 AM

Author: moverby Subject: Sticky Note Date: 11/3/2008 9:18:13 PM

Previously discussed to use key. Revisit?

Author: moverby Subject: Sticky Note Date: 11/4/2008 10:58:12 AM

Rejected as self-explanatory.

Number: 9 Author: HPQ-RElliott Subject: Highlight Date: 9/3/2008 9:42:24 AM -07'00'

power condition mode page
s/b
Power Condition mode page

Status
moverby Accepted 11/3/2008 9:18:18 PM

Number: 10 Author: Kevin_Marks Subject: Highlight Date: 8/26/2008 6:08:12 PM -07'00'

power condition
s/b
Power Condition

Status
moverby Accepted 11/3/2008 9:17:57 PM

Number: 11 Author: HPQ-RElliott Subject: Highlight Date: 9/3/2008 9:42:24 AM -07'00'

Log pages
s/b
Log parameters

Status
moverby Accepted 11/3/2008 9:18:26 PM

Comments from page 120 continued on next page

Table 74 — MODE SENSE STANDBY TIMER field translation

ATA Count field	~~Power Condition mode page~~ STANDBY CONDITION TIMER field
01h - F0h	ATA Count field x 50
FCh (i.e., 21 minutes)	12 600
FFh (i.e., 21 minutes 15 seconds)	12 750
F1h - FBh (i.e., 30 minutes to 330 minutes)	(ATA Count field - 240) x 18 000
FDh (i.e., 8 hours to 12 hours)	432 000
Not retained by the SATL	FFFF_FFFFh
~~Note: All times are approximate~~	

Table 75 — MODE SELECT STANDBY TIMER field translation

~~Power Condition Mode Page~~ STANDBY CONDITION TIMER field	ATA Count field
1 to 12 000 (i.e., 0.001 second to 1 200 seconds)	INT((z - 1) / 50) + 1[a]
12 001 to 12 600	FCh (i.e., 21 minutes)
12 601 to 12 750	FFh (i.e., 21 minutes 15 seconds)
12 751 to 17 999	F1h
18 000 to 198 000 (i.e., 30 minutes to 330 minutes)	INT(z / 18 000) + 240[a]
All other values	FDh (i.e., 8 hours to 12 hours)
Key: z = Contents of the power condition mode page STANDBY CONDITION TIMER field.	
[a] INT() is the integer result of the specified division operation with any decimal remainder discarded.	

10.2 Log pages

10.2.1 12 Log pages overview

This standard defines translations for the log pages listed in table 76.

Table 76 — Summary of SCSI / ATA log page mapping

SCSI log page	Reference
Application Client (i.e., page code 0Fh)	10.2.2
Supported Log Pages (i.e., page code 00h)	10.2.3
Self-Test Results (i.e., page code 10h)	10.2.4
Informational Exceptions (i.e., page code 2Fh)	10.2.5
All others	Unspecified (see 3.4.2)

Number: 12 Author: HPQ-RElliott Subject: Highlight Date: 9/3/2008 9:42:24 AM -07'00'

Log pages
s/b
Log parameters

Status
moverby Accepted 11/3/2008 9:18:31 PM

Number: 13 Author: HPQ-RElliott Subject: Note Date: 9/3/2008 9:42:24 AM -07'00'

Add
Supported Log Pages and Subpages (00h / FFh)

Most of the description can reference Supported Log Pages (00h / 00h)

Status
moverby Accepted 11/3/2008 9:32:23 PM

Number: 14 Author: HPQ-RElliott Subject: Note Date: 9/3/2008 9:42:24 AM -07'00'

Add subpage codes after each log page code (these pages are all xxh / 00h)

Status
moverby Accepted 11/3/2008 9:19:09 PM

10.2.2 Application Client log page

10.2.2.1 Translation Overview

The Application Client log page provides a location for application clients to store information. A SATL translates a LOG SELECT or LOG SENSE command to the application client log page to accesses to the ATA host vendor-specific log pages. Table 77 describes the translation of the general usage application client parameter data for the application client log page.

The SATL determines if the attached ATA device supports host vendor specific log pages by reading log page address 00h using READ LOG EXT, READ LOG DMA EXT, or SMART READ LOG.

If the attached ATA device:

a) Does not support the general purpose logging feature set and the SMART feature set is disabled; or
b) Does not support host vendor-specific log pages

Then the SATL shall complete the LOG SENSE or LOG SELECT command for the application client specific log page with a CHECK CONDITION status, a sense key of ILLEGAL REQUEST, and an additional sense code of INVALID FIELD IN CDB.

Table 77 — General usage application client parameter data fields

Field	Description or Reference
PARAMETER CODE	10.2.2.2
DU	Shall be 1b ~~(see SPC-4)~~
TSD	Shall be 0b ~~(see SPC-4)~~
ETC	Shall be 0b ~~(see SPC-4)~~
TMC	This field is ignored ~~(see SPC-4)~~
FORMAT AND LINKING	Shall be 11b ~~(see SPC-4)~~
PARAMETER LENGTH	Shall be FCh ~~(see SPC-4)~~
GENERAL USAGE PARAMETER BYTES	10.2.2.2

10.2.2.2 LOG SELECT translation

The SATL stores the application client parameter for a LOG SELECT command in the ATA device host vendor-specific log page. The SATL stores the application client parameter data at the ATA log address as specified in table 2.

Within an ATA log address, the SATL shall store each parameter code in ascending order within the sixteen 512-byte data blocks for each ATA log address. For example, parameter code 0000h is stored at offset 0 of the first 512-byte block of data at log address 90h and parameter code 0001h is stored at offset 256 in the first 512-byte block of data at log address 90h. The SATL stores this information by issuing a SMART WRITE LOG, WRITE LOG EXT, or WRITE LOG DMA EXT command to the device.

The SATL shall ensure that any previously stored data at the log address is preserved when writing to the log address for the requested parameter data.

Page: 121

Number: 1 Author: HPQ-RElliott Subject: Note Date: 9/3/2008 9:42:24 AM -07'00'

Decide if all log pages should describe the log page header fields (DS, SPF, PAGE CODE, SUBPAGE CODE, PAGE LENGTH) or not and make them consistent.

Right now, 10.2.2 shows none of them, 10.2.4 shows two of the fields, ...

Status
moverby Accepted 11/3/2008 9:34:04 PM

Author: moverby Subject: Sticky Note Date: 11/3/2008 9:33:58 PM

They should all show them

Number: 2 Author: Kevin_Marks Subject: Highlight Date: 8/27/2008 7:22:27 AM -07'00'

LOG SELECT is not define as a translation in this standard. Also if keep in add the word command.

Status
moverby Accepted 11/4/2008 11:08:48 AM

Author: moverby Subject: Sticky Note Date: 11/3/2008 9:33:38 PM

Keep LOG SELECT

Author: moverby Subject: Sticky Note Date: 11/4/2008 11:02:50 AM

Add translation for LOG SELECT -

Author: moverby Subject: Sticky Note Date: 11/4/2008 11:08:36 AM

as separate proposal.

Number: 3 Author: Kevin_Marks Subject: Highlight Date: 8/27/2008 7:09:51 AM -07'00'

reading log page address 00h using READ LOG EXT, READ LOG DMA EXT, or SMART READ LOG.
s/b
reading ATA log page address 00h using ATA READ LOG EXT command, ATA READ LOG DMA EXT command or ATA SMART READ LOG command.

Status
moverby Accepted 11/3/2008 9:34:45 PM

Author: moverby Subject: Sticky Note Date: 11/3/2008 9:34:41 PM

Instead just add the word commands to be consistent with other uses

Number: 4 Author: Kevin_Marks Subject: Highlight Date: 8/27/2008 7:12:02 AM -07'00'

Does
s/b
does

Author: moverby Subject: Sticky Note Date: 11/3/2008 9:35:17 PM

I've had comments both ways to capitalize and to not-capitalize.

Number: 5 Author: Kevin_Marks Subject: Highlight Date: 8/27/2008 7:11:53 AM -07'00'

Does
s/b
does

Status
moverby Accepted 11/4/2008 11:10:13 AM

Author: moverby Subject: Sticky Note Date: 11/4/2008 11:12:02 AM

Based on style guide section - 6.2.5.1

Number: 6 Author: LSI-Penokie Subject: Highlight Date: 8/20/2008 1:44:55 PM -07'00'

This should be <<log pages, >>

Status
moverby Accepted 11/3/2008 9:35:22 PM

Number: 7 Author: Kevin_Marks Subject: Highlight Date: 8/27/2008 7:12:34 AM -07'00'

Then
s/b
then

Status
moverby Accepted 11/3/2008 9:35:57 PM

Number: 8 Author: LSI-Penokie Subject: Highlight Date: 8/20/2008 1:45:12 PM -07'00'

This should be << then the SATL >>

Status
moverby Accepted 11/3/2008 9:35:48 PM

Number: 9 Author: Kevin_Marks Subject: Highlight Date: 8/27/2008 7:24:40 AM -07'00'

LOG SELECT is not define as a translation in this standard. Also if keep in add the word command.

Status
moverby Accepted 11/4/2008 11:12:22 AM

Author: moverby Subject: Sticky Note Date: 11/4/2008 11:12:12 AM

Agreed.

Number: 10 Author: HPQ-RElliott Subject: Note Date: 9/3/2008 9:42:24 AM -07'00'

delete whitespace above table 77

Status
moverby Accepted 11/3/2008 9:36:03 PM

Number: 11 Author: HPQ-RElliott Subject: Note Date: 9/3/2008 9:42:24 AM -07'00'

left justify Description or Reference in table 77

Comments from page 121 continued on next page

10.2.2 Application Client log page

10.2.2.1 Translation Overview

The Application Client log page provides a location for application clients to store information. A SATL translates a LOG SELECT or LOG SENSE command to the application client log page to accesses to the ATA host vendor-specific log pages. Table 77 describes the translation of the general usage application client parameter data for the application client log page.

The SATL determines if the attached ATA device supports host vendor specific log pages by reading log page address 00h using READ LOG EXT, READ LOG DMA EXT, or SMART READ LOG.

If the attached ATA device:

a) Does not support the general purpose logging feature set and the SMART feature set is disabled; or
b) Does not support host vendor-specific log pages

Then the SATL shall complete the LOG SENSE or LOG SELECT command for the application client specific log page with a CHECK CONDITION status, a sense key of ILLEGAL REQUEST, and an additional sense code of INVALID FIELD IN CDB.

Table 77 — General usage application client parameter data fields

Field	Description or Reference
PARAMETER CODE	10.2.2.2
DU	13 Shall be 1b 14 12 ~~(see SPC-4)~~
TSD	15 17 Shall be 0b 18 16 ~~(see SPC-4)~~
ETC	20 Shall be 0b 21 19 ~~(see SPC-4)~~
TMC	This field is ignored 22 ~~(see SPC-4)~~
FORMAT AND LINKING	24 Shall be 11b 25 23 ~~(see SPC-4)~~
PARAMETER LENGTH	Shall be FCh ~~(see SPC-4)~~
GENERAL USAGE PARAMETER BYTES	10.2.2.2

10.2.2.2 LOG SELECT translation

The SATL stores the application client parameter for a LOG SELECT command in the ATA device host vendor-specific log page. The SATL stores the application client parameter data at the ATA log address as specified in table 2.

Within an ATA log address, the SATL shall store each parameter code in ascending order within the sixteen 512-byte data blocks for each ATA log address. For example, parameter code 0000h is stored at offset 0 of the first 512-byte block of data at log address 90h and parameter code 0001h is stored at offset 256 in the first 512-byte block of data at log address 90h. The SATL stores this information by issuing a SMART WRITE LOG, WRITE LOG EXT, or WRITE LOG DMA EXT command to the device.

The SATL shall ensure that any previously stored data at the log address is preserved when writing to the log address for the requested parameter data.

Status
moverby Accepted 11/3/2008 9:36:14 PM
Number: 12 Author: Kevin_Marks Subject: Cross-Out Date: 8/27/2008 10:22:03 AM -07'00'

Status
moverby Accepted 11/3/2008 9:36:21 PM
Number: 13 Author: HPQ-RElliott Subject: Highlight Date: 9/3/2008 9:42:24 AM -07'00'
Shall be
s/b
Shall be set to

Status
moverby Accepted 11/3/2008 9:36:38 PM
Number: 14 Author: Kevin_Marks Subject: Highlight Date: 8/27/2008 10:23:09 AM -07'00'
1b
s/b
set to one

Status
moverby Accepted 11/3/2008 9:36:29 PM
Number: 15 Author: Kevin_Marks Subject: Sticky Note Date: 8/27/2008 10:16:24 AM -07'00'
Add sub page code field DS bit and SPF for SPC-4

Status
moverby Accepted 11/3/2008 9:36:43 PM
Number: 16 Author: Kevin_Marks Subject: Cross-Out Date: 8/27/2008 10:22:05 AM -07'00'

Status
moverby Accepted 11/3/2008 9:36:48 PM
Number: 17 Author: HPQ-RElliott Subject: Highlight Date: 9/3/2008 9:42:24 AM -07'00'
Shall be
s/b
Shall be set to

Status
moverby Accepted 11/3/2008 9:36:59 PM
Number: 18 Author: Kevin_Marks Subject: Highlight Date: 8/27/2008 10:23:32 AM -07'00'
0b
s/b
set to zero

Status
moverby Accepted 11/3/2008 9:36:54 PM
Number: 19 Author: Kevin_Marks Subject: Cross-Out Date: 8/27/2008 10:22:08 AM -07'00'

Status
moverby Accepted 11/3/2008 9:37:05 PM
Number: 20 Author: HPQ-RElliott Subject: Highlight Date: 9/3/2008 9:42:24 AM -07'00'
Shall be
s/b
Shall be set to

Status
moverby Accepted 11/3/2008 9:37:14 PM
Number: 21 Author: Kevin_Marks Subject: Highlight Date: 8/27/2008 10:23:37 AM -07'00'
0b
s/b
set to zero

Status
moverby Accepted 11/3/2008 9:37:10 PM
Number: 22 Author: Kevin_Marks Subject: Cross-Out Date: 8/27/2008 10:22:13 AM -07'00'

Status
moverby Accepted 11/3/2008 9:37:22 PM
Number: 23 Author: Kevin_Marks Subject: Cross-Out Date: 8/27/2008 10:22:15 AM -07'00'

Status
moverby Accepted 11/3/2008 9:37:29 PM
Number: 24 Author: HPQ-RElliott Subject: Highlight Date: 9/3/2008 9:42:24 AM -07'00'
Shall be
s/b
Shall be set to

Status
moverby Accepted 11/3/2008 9:37:55 PM
Number: 25 Author: Kevin_Marks Subject: Highlight Date: 8/27/2008 10:23:49 AM -07'00'
0b
s/b
set to 11b

Status
moverby Accepted 11/3/2008 9:37:49 PM

Comments from page 121 continued on next page

10.2.2 Application Client log page

10.2.2.1 Translation Overview

The Application Client log page provides a location for application clients to store information. A SATL translates a LOG SELECT or LOG SENSE command to the application client log page to accesses to the ATA host vendor-specific log pages. Table 77 describes the translation of the general usage application client parameter data for the application client log page.

The SATL determines if the attached ATA device supports host vendor specific log pages by reading log page address 00h using READ LOG EXT, READ LOG DMA EXT, or SMART READ LOG.

If the attached ATA device:

a) Does not support the general purpose logging feature set and the SMART feature set is disabled; or
b) Does not support host vendor-specific log pages

Then the SATL shall complete the LOG SENSE or LOG SELECT command for the application client specific log page with a CHECK CONDITION status, a sense key of ILLEGAL REQUEST, and an additional sense code of INVALID FIELD IN CDB.

Table 77 — General usage application client parameter data fields

Field	Description or Reference
PARAMETER CODE	10.2.2.2
DU	Shall be 1b ~~(see SPC-4)~~
TSD	Shall be 0b ~~(see SPC-4)~~
ETC	Shall be 0b ~~(see SPC-4)~~
TMC	This field is ignored ~~(see SPC-4)~~
FORMAT AND LINKING	Shall be 11b ~~(see SPC-4)~~
PARAMETER LENGTH	27 Shall be 28 FCh 26 ~~(see SPC-4)~~
GENERAL USAGE PARAMETER BYTES	10.2.2.2

29 #### 10.2.2.2 LOG SELECT translation

The SATL stores the application client parameter for a LOG SELECT command in the ATA device host vendor-specific log page. The SATL stores the application client parameter data at the ATA log address as specified in 132 table 2.

Within an ATA log address, the SATL shall store each parameter code in ascending order within the sixteen 512-byte data blocks for each ATA log 33 address. For example, parameter code 0000h is stored at offset 0 of the first 512-byte block of data at log address 90h and parameter code 0001h is stored at offset 256 in the first 512-byte block of data at log address 90h. The SATL stores this information by issuing 35 a SMART WRITE LOG, WRITE LOG EXT, or WRITE LOG DMA EXT command to the device.

The SATL shall ensure that any previously stored data at the log address is preserved when writing to the log address for the requested parameter data.

Number: 26 Author: Kevin_Marks Subject: Cross-Out Date: 8/27/2008 10:22:18 AM -07'00'

Status
moverby Accepted 11/3/2008 9:37:59 PM

Number: 27 Author: HPQ-RElliott Subject: Highlight Date: 9/3/2008 9:42:24 AM -07'00'

Shall be
s/b
Shall be set to

Status
moverby Accepted 11/3/2008 9:38:08 PM

Number: 28 Author: Kevin_Marks Subject: Highlight Date: 8/27/2008 10:24:02 AM -07'00'

FCh
s/b
set to FCh

Status
moverby Accepted 11/3/2008 9:38:03 PM

Number: 29 Author: Kevin_Marks Subject: Highlight Date: 8/27/2008 7:27:12 AM -07'00'

Need to add LOG SELECT translation to 8.3.

Status
moverby Accepted 11/4/2008 11:14:17 AM
Author: moverby Subject: Sticky Note Date: 11/4/2008 11:14:15 AM
Agreed. Will be separate proposal for LOG SELECT translation.

Number: 30 Author: HPQ-RElliott Subject: Highlight Date: 9/3/2008 9:42:24 AM -07'00'

table 2
is incorrect; probably mean table 78.

Status
moverby Accepted 11/3/2008 9:39:22 PM

Number: 31 Author: Kevin_Marks Subject: Highlight Date: 8/27/2008 7:28:08 AM -07'00'

table 2.
s/b
table 78.

Status
moverby Accepted 11/3/2008 9:39:18 PM

Number: 32 Author: bmartin Subject: Highlight Date: 9/4/2008 12:23:50 AM -07'00'

table 2.

s/b

table 78

Status
moverby Accepted 11/3/2008 9:39:14 PM

Number: 33 Author: LSI-Penokie Subject: Highlight Date: 8/20/2008 1:46:57 PM -07'00'

This should be << address (e.g., parameter code 0000h is stored at offset 0 of the first 512-byte block of data at log address 90h and parameter code 0001h is stored at offset 256 in the first 512-byte block of data at log address 90h). >>

Status
moverby Accepted 11/3/2008 9:39:51 PM

Number: 34 Author: Kevin_Marks Subject: Highlight Date: 8/27/2008 7:30:14 AM -07'00'

a SMART WRITE LOG, WRITE LOG EXT, or WRITE LOG DMA EXT command to the device
s/b
a ATA SMART WRITE LOG command, ATA WRITE LOG EXT command or ATA WRITE LOG DMA EXT command to the device

Status
moverby Rejected 11/3/2008 9:39:46 PM
Author: moverby Subject: Sticky Note Date: 11/4/2008 11:04:57 AM

Number: 35 Author: LSI-Penokie Subject: Highlight Date: 8/20/2008 1:49:52 PM -07'00'

This should be << a SMART WRITE LOG command, WRITE LOG EXT command, or WRITE LOG DMA EXT command >>

Status
moverby Rejected 11/3/2008 9:39:39 PM

Table 78 — Parameter Storage Location

Parameter Code	ATA Log Address
0000h - 001Fh	90h
0020h - 003Fh	91h
0040h - 005Fh	92h
0060h - 007Fh	93h
0080h - 009Fh	94h
00A0h - 00BFh	95h
00C0h - 00DFh	96h
00E0h - 00FFh	97h
0100h - 011Fh	98h
0120h - 013Fh	99h
0140h - 015Fh	9Ah
0160h - 017Fh	9Bh
0180h - 019Fh	9Ch
01A0h - 01BFh	9Dh
01C0h - 01DFh	9Eh
01E0h - 01FFh	9Fh

10.2.2.3 LOG SENSE translation

The SATL retrieves the requested parameter data by reading the ATA log address that stores the parameter code using a SMART READ LOG, READ LOG EXT, or READ LOG DMA EXT command. The log address to read is determined by Table 2.

Page: 122

Number: 1 Author: Kevin_Marks Subject: Highlight Date: 8/27/2008 7:33:19 AM -07'00'

Table 78 — Parameter Storage Location - need statement that says 0200h-FFFFh is reserved of check conditions.

Status

moverby Accepted 9/9/2008 1:44:16 PM -07'00'

Author: moverby Subject: Sticky Note Date: 9/9/2008 1:44:12 PM -07'00'

Add a line to the table to specify that all other parameter codes are reserved

Number: 2 Author: Kevin_Marks Subject: Highlight Date: 8/27/2008 7:35:51 AM -07'00'

a SMART READ LOG, READ LOG EXT, or READ LOG DMA EXT command

s/b

a ATA SMART READ LOG command, ATA READ LOG EXT command, or ATA READ LOG DMA EXT command

Status

moverby Rejected 11/3/2008 9:40:38 PM

Number: 3 Author: LSI-Penokie Subject: Highlight Date: 8/20/2008 1:50:52 PM -07'00'

This should be << SMART READ LOG command, READ LOG EXT command, or READ LOG DMA EXT command >>

Status

moverby Rejected 11/3/2008 9:40:33 PM

Number: 4 Author: HPQ-RElliott Subject: Highlight Date: 9/3/2008 9:42:24 AM -07'00'

Table 2

s/b

table 78 (see 10.2.2.2)

Status

moverby Accepted 11/3/2008 9:40:49 PM

Number: 5 Author: Kevin_Marks Subject: Highlight Date: 8/27/2008 7:36:04 AM -07'00'

Table 2.

s/b

table 78.

Status

moverby Accepted 11/3/2008 9:40:44 PM

10.2.3 Supported Log Pages log page

The Supported Log Pages log page (see table 79) returns the list of log pages supported by the SATL (see SPC-3).

Table 79 — Supported Log Pages log page fields

Field	Description or reference
PAGE CODE	Shall be set to zero
PAGE LENGTH	Unspecified (see 3.4.2)
SUPPORTED PAGE LIST	The SATL shall include log pages as follows: a) the Informational Exceptions log page if the ATA device supports the ATA SMART feature set (i.e., ATA IDENTIFY DEVICE data word 82 bit 0 is set to one); and b) the Self-Test Results log page if the ATA device supports the ATA SMART self-test (i.e., ATA IDENTIFY DEVICE data word 84 bit 1 is set to one).

10.2.4 Self-Test Results log page

10.2.4.1 Self-Test Results log page overview

The Self-Test Results log page provides the results from self-test results descriptor entry pointed to by the Self-test descriptor index. Table 80 shows the Self-Test Results log page header fields.

Table 80 — Self-Test Results log page fields

Field	Description or reference
PAGE CODE	Shall be set to 10h
PAGE LENGTH	Shall be set to 190h

Translations of the fields for the Self-Test Results log parameters for the Self-Test Results log page are shown in table 81.l).

Table 81 — Self-Test Results log parameters (part 1 of 4)

Field	Description or reference
PARAMETER CODE	The SATL shall return log parameters with the PARAMETER CODE field set to 0001h through 0014h.
DU	Shall be set to zero
~~DS~~	~~Shall be set to zero~~
TSD	Shall be set to zero
ETC	Shall be set to zero
TMC	Shall be set to zero
LBIN	Shall be set to one
LP	Shall be set to one
PARAMETER LENGTH	Shall be set to 10h

Page: 123

Number: 1 Author: Kevin_Marks Subject: Sticky Note Date: 8/27/2008 10:28:23 AM -07'00'

Add sub page code field=00 DS bit and SPF=0 for SPC-4

Status
moverby Accepted 11/3/2008 9:40:58 PM

Number: 2 Author: HPQ-RElliott Subject: Highlight Date: 9/3/2008 9:42:24 AM -07'00'

SUPPORTED PAGE LIST
s/b
Supported pages

Status
moverby Accepted 11/3/2008 9:41:04 PM

Number: 3 Author: Kevin_Marks Subject: Sticky Note Date: 8/27/2008 10:05:44 AM -07'00'

Need to add Application log page if supported. Or say may include others

Status
moverby Accepted 11/3/2008 9:41:15 PM

Number: 4 Author: Kevin_Marks Subject: Sticky Note Date: 8/27/2008 10:18:05 AM -07'00'

Add sub page code field =00h, DS bit and SPF = 0 for SPC-4

Status
moverby Accepted 11/3/2008 9:41:20 PM

Number: 5 Author: HPQ-RElliott Subject: Highlight Date: 9/3/2008 9:42:24 AM -07'00'

table 81.I).
s/b
table 81).

Status
moverby Accepted 11/3/2008 9:41:29 PM

Number: 6 Author: Kevin_Marks Subject: Highlight Date: 8/27/2008 10:13:03 AM -07'00'

table 81.I).\
s/b
table 81.

Status
moverby Accepted 11/3/2008 9:41:25 PM

Number: 7 Author: HPQ-RElliott Subject: Cross-Out Date: 9/3/2008 9:42:24 AM -07'00'

Delete
DS Shall be set to zero

Status
moverby Accepted 11/3/2008 9:41:43 PM

Number: 8 Author: Kevin_Marks Subject: Cross-Out Date: 8/27/2008 10:18:51 AM -07'00'

Move to table 80 as not part of each parameter in SPC-4

Status
moverby Accepted 11/3/2008 9:41:39 PM

Number: 9 Author: HPQ-RElliott Subject: Note Date: 9/3/2008 9:42:24 AM -07'00'

Combine LBIN and LP into FORMAT AND LINKING 2-bit field

Status
moverby Accepted 11/3/2008 9:41:50 PM

Number: 10 Author: Kevin_Marks Subject: Highlight Date: 8/27/2008 10:19:53 AM -07'00'

LBIN Shall be set to one
LP Shall be set to one
s/b
FORMAT AND LINKING and set to 11b.

Status
moverby Accepted 11/3/2008 9:41:54 PM

Table 81 — Self-Test Results log parameters (part 2 of 4)

Field	Description or reference
SELF-TEST CODE	The SATL shall read the ATA log data as defined in 10.2.4.2. If the SATL reads the ATA log data using the ATA READ LOG EXT command specifying the Extended SMART self-test log, then the SATL shall check if the value contained in the Self-test descriptor index field in the first block of data (i.e., bytes 2 and 3) is set to zero. If the value contained in the Self-test descriptor index field is set to zero, then the SATL shall set the SELF-TEST CODE field to zero for each of the log parameters returned.If the value contained in the Self-test descriptor index field is set to a non-zero value, then the SELF-TEST CODE field is unspecified (see 3.4.2). If the SATL reads the ATA log data using the ATA SMART READ LOG command specifying the SMART self-test log, then the SELF-TEST CODE field is unspecified (see 3.4.2).
SELF-TEST RESULTS	The SATL shall read the ATA log data as defined in 10.2.4.2. If the SATL reads the ATA log data using the ATA READ LOG EXT command specifying the Extended SMART self-test log, then the SATL shall check if the value contained in the Self-test descriptor index field in the first block of data (i.e., bytes 2 and 3) is set to zero. If the value contained in the Self-test descriptor index field is set to zero, then the SATL shall set the SELF-TEST RESULTS field to zero for each log parameter returned. If the value contained in the Self-test descriptor index field is set to a nonzero value, then the SATL shall set the SELF-TEST RESULTS field to: a) the value contained in the Self-test Execution Status bits of the content of the self-test execution status byte field of the nth descriptor entry, where n is equal to the result of the value contained in the Self-test descriptor index field minus the value contained in the PARAMETER CODE field for the log parameter being returned plus one, if the result of the value contained in the Self-test descriptor index field minus the value contained in the PARAMETER CODE field for the log parameter being returned plus one is greater than zero (e.g., for a log parameter with the PARAMETER CODE field of 0002h and a value contained in the Selftest descriptor index field of 6h, then the fourth descriptor entry is used); or b) zero, if the result of the value contained in the Self-test descriptor index field minus the value contained in the PARAMETER CODE field for the log parameter being returned plus one is less than or equal to zero. If the SATL reads the ATA log data using the ATA SMART READ LOG command specifying the SMART self-test log, then the SATL shall set the SELF-TEST RESULTS field to the value contained in the Self-test Execution Status bits of the content of the self-test execution status byte field of the nth descriptor entry, where n is equal to the value contained in the PARAMETER CODE field for the log parameter being returned (e.g., for a log parameter with the PARAMETER CODE field of 0002h, then the second descriptor entry is used).
SELF-TEST NUMBER	Unspecified (see 3.4.2)

Page: 124

Number: 1 Author: LSI-Penokie Subject: Highlight Date: 8/20/2008 1:54:35 PM -07'00'

This is missing a space between the <<returned. >> and the << If >>.

Status

moverby Accepted 11/3/2008 9:42:01 PM

Table 81 — Self-Test Results log parameters (part 3 of 4)

Field	Description or reference
TIMESTAMP	The SATL shall read the ATA log data as defined in 10.2.4.2. If the SATL reads the ATA log data using the ATA READ LOG EXT command specifying the Extended SMART self-test log, then the SATL shall check if the value contained in the Self-test descriptor index field in the first block of data (i.e., bytes 2 and 3) is set to zero. If the value contained in the Self-test descriptor index field is set to zero, then the SATL shall set the TIMESTAMP field to zero for each log parameter returned. If the value contained in the Self-test descriptor index field is set to a nonzero value, then the SATL shall set the TIMESTAMP field to: a) the values contained in the Life timestamp (most significant byte) field and Life timestamp (least significant byte) field of the nth descriptor entry, where n is equal to the result of the value contained in the Self-test descriptor index field minus the value contained in the PARAMETER CODE field for the log parameter being returned plus one, if the result of value contained in the Self-test descriptor index field minus the value contained in the PARAMETER CODE field for the log parameter being returned plus one is greater than zero (e.g., for a log parameter with the PARAMETER CODE field of 0002h and a value contained in the Selftest descriptor index field of 6h, then the fourth descriptor entry is used); or b) zero, if the result of the value contained in the Self-test descriptor index field minus the value contained in the PARAMETER CODE field for the log parameter being returned plus one is less than or equal to zero. If the SATL reads the ATA log data using the ATA SMART READ LOG command specifying the SMART self-test log, then the SATL shall set the TIMESTAMP field to the values contained in the Life timestamp (most significant byte) field and Life timestamp (least significant byte) field of the nth descriptor entry, where n is equal to the value contained in the PARAMETER CODE field for the log parameter being returned (e.g., for a log parameter with the PARAMETER CODE field of 0002h, then the second descriptor entry is used).

Number: 1 Author: HPQ-RElliott Subject: Note Date: 9/3/2008 9:42:24 AM -07'00'

TIMESTAMP
s/b
ACCUMULATED POWER ON HOURS

Status
moverby Accepted 11/4/2008 11:16:50 AM

Author: moverby Subject: Sticky Note Date: 11/3/2008 9:44:30 PM

I don't think this translation works any longer with ACCUMULATED POWER ON HOURS

Table 81 — Self-Test Results log parameters (part 4 of 4)

Field	Description or reference
ADDRESS OF FIRST FAILURE	The SATL shall read the ATA log data as defined in 10.2.4.2. If the SATL reads the ATA log data using the ATA READ LOG EXT command specifying the Extended SMART self-test log, then the SATL shall check if the value contained in the Self-test descriptor index field in the first block of data (i.e., bytes 2 and 3) is set to zero. If the value contained in the Self-test descriptor index field is set to zero, then the SATL shall set the ADDRESS OF FIRST FAILURE field to zero for each log parameter returned. If the value contained in the Self-test descriptor index field is set to a nonzero value, then the SATL shall set the ADDRESS OF FIRST FAILURE field to: a) the values contained in the Failing LBA (47:40) field, Failing LBA (39:32) field, Failing LBA (31:24) field, Failing LBA (23:16) field, Failing LBA (15:8) field, and Failing LBA (7:0) field of the nth descriptor entry, where n is equal to the result of the value contained in the Self-test descriptor index field minus the value contained in the PARAMETER CODE field for the log parameter being returned plus one, if the result of the value contained in the Self-test descriptor index field minus the value contained in the PARAMETER CODE field for the log parameter being returned plus one is greater than zero (e.g., for a log parameter with the PARAMETER CODE field of 0002h and a value contained in the Self-test descriptor index field of 6h, then the fourth descriptor entry is used); or b) zero, if the result of the value contained in the Self-test descriptor index field minus the value contained in the PARAMETER CODE field for the log parameter being returned plus one is less than or equal to zero. If the SATL reads the ATA log data using the ATA SMART READ LOG command specifying the SMART self-test log, then the SATL shall set the ADDRESS OF FIRST FAILURE field to the values contained in the Failing LBA (27:24) field, Failing LBA (23:16) field, Failing LBA (15:8) field, and Failing LBA (7:0) field of the nth descriptor entry, where n is equal to the value contained in the PARAMETER CODE field for the log parameter being returned (e.g., for a log parameter with the PARAMETER CODE field of 0002h, then the second descriptor entry is used).
SENSE KEY	10.2.4.3
ADDITIONAL SENSE CODE	10.2.4.3
ADDITIONAL SENSE CODE QUALIFIER	10.2.4.3

10.2.4.2 A method of determining ATA command selection for field translations

To translate the SELF-TEST CODE field, the SELF-TEST RESULTS field, the TIMESTAMP field, the ADDRESS OF FIRST FAILURE field, the SENSE KEY field, the ADDITIONAL SENSE CODE field, and the ADDITIONAL SENSE CODE QUALIFIER field of Self-Test Results log parameters, the SATL shall send an ATA IDENTIFY DEVICE command to the ATA device, and from the returned data the SATL shall determine if the ATA device supports the 48-bit Address feature set. If the 48-bit Address feature set is supported (i.e., bit 10 of word 83 of ATA IDENTIFY DEVICE data is set to one), then the SATL shall send an ATA READ LOG EXT command with the Log address set to 07h (i.e., Extended SMART self-test log) to the ATA device. If the 48-bit Address feature set is not supported (i.e., bit 10 of word 83 of ATA IDENTIFY DEVICE data is set to zero), then the SATL shall send

This page contains no comments

an ATA SMART READ LOG command with the Log address set to 06h (i.e., SMART self-test log) to the ATA device.

10.2.4.3 Sense key and additional sense code

The SATL shall determine the SENSE KEY field, the ADDITIONAL SENSE CODE field, and the ADDITIONAL SENSE CODE QUALIFIER field returned in each log parameter from the content of the self-test execution status byte returned from a ATA READ LOG EXT command or ATA SMART READ LOG command sent to the ATA device (see 10.2.4.2). The values returned in each log parameter shall be translated into sense data for the sense key, and additional sense code as shown in table 82.

Table 82 — ATA Self-test execution status values translated to SCSI sense keys and sense codes

ATA	SCSI		
Self-Test execution status value	**Sense key**	**Additional sense code**	**NN**
0	NO SENSE	NO ADDITIONAL SENSE INFORMATION	n/a
1	ABORTED COMMAND	DIAGNOSTIC FAILURE ON COMPONENT NN (80h - FFh)	81h
2		DIAGNOSTIC FAILURE ON COMPONENT NN (80h - FFh)	82h
3		DIAGNOSTIC FAILURE ON COMPONENT NN (80h - FFh)	83h
4	HARDWARE ERROR	DIAGNOSTIC FAILURE ON COMPONENT NN (80h - FFh)	84h
5		DIAGNOSTIC FAILURE ON COMPONENT NN (80h - FFh)	85h
6		DIAGNOSTIC FAILURE ON COMPONENT NN (80h - FFh)	86h
7	MEDIUM ERROR	DIAGNOSTIC FAILURE ON COMPONENT NN (80h - FFh)	87h
8	HARDWARE ERROR	DIAGNOSTIC FAILURE ON COMPONENT NN (80h - FFh)	88h
9-14	Unspecified (see 3.4.2)[a]		
15	NO SENSE	NO ADDITIONAL SENSE INFORMATION	n/a

[a] Self-Test execution status values from 9 to 14 are reserved in ATA8-ACS.

10.2.5 Informational Exceptions log page

10.2.5.1 Informational Exceptions log page overview

The Informational Exceptions log page provides detail about informational exceptions. Table 83 shows the log page header fields.

Table 83 — Informational Exceptions log page header fields

Field [1]	Description or reference
PAGE CODE	Shall be set to 2Fh. [2] ~~This field value is specific to the Informational Exceptions log page.~~ The SATL shall send the ATA SMART RETURN STATUS command to the [3] non-packet device. Data returned from the [4] non-packet device shall be translated into the appropriate log sense parameter data (see 10.2.5.2) to be returned to the application client.
PAGE LENGTH	Unspecified (see 3.4.2)

Page: 127

Number: 1 Author: Kevin_Marks Subject: Sticky Note Date: 8/27/2008 10:36:54 AM -07'00'

Add sub page code field =00h, DS bit and SPF = 0 for SPC-4

Status
moverby Accepted 11/3/2008 9:44:40 PM

Number: 2 Author: Kevin_Marks Subject: Cross-Out Date: 8/27/2008 10:34:59 AM -07'00'

Status
moverby Accepted 11/3/2008 9:44:47 PM

Number: 3 Author: Kevin_Marks Subject: Highlight Date: 8/27/2008 10:43:18 AM -07'00'

non-packet - Why is this one specifically called out as non-packet. Non-packet apply to the self-test log also and I would say almost all other areas of this standard.

s/b
ATA

Status
moverby Accepted 11/3/2008 9:44:56 PM

Number: 4 Author: Kevin_Marks Subject: Highlight Date: 8/27/2008 10:43:28 AM -07'00'

non-packet/
s/b ATA

Status
moverby Accepted 11/3/2008 9:45:00 PM

The first log parameter is the informational exceptions general parameter shown in table 84.

Table 84 — Informational Exceptions general parameter data

Field	Description or reference
PARAMETER CODE	Shall be set to 0000h
DU	Shall be set to zero
~~DS~~	~~Shall be set to zero~~
TSD	Shall be set to zero
ETC	Shall be set to zero
TMC	Shall be set to zero
LBIN	Shall be set to one
LP	Shall be set to one
PARAMETER LENGTH	Unspecified (see 3.4.2)
INFORMATIONAL EXCEPTION ADDITIONAL SENSE CODE	10.2.5.2
INFORMATIONAL EXCEPTION ADDITIONAL SENSE CODE QUALIFIER	10.2.5.2
MOST RECENT TEMPERATURE READING	10.2.5.3
Vendor Specific	Unspecified (see 3.4.2)

10.2.5.2 Additional sense code and additional sense code qualifier translations

Data received from a ATA device in response to an ATA SMART RETURN STATUS command shall be translated by the SATL into the informational exceptions general parameter data returned to the application client. Table 85 provides the parameter data translations for the INFORMATIONAL EXCEPTION ADDITIONAL SENSE CODE field and the INFORMATIONAL EXCEPTION ADDITIONAL SENSE CODE QUALIFIER field.

Table 85 — ATA SMART RETURN STATUS translations

Data returned to SATL from the ATA device by the ATA SMART RETURN STATUS command	SMART condition	Informational exceptions general parameter data fields
LBA Mid = 4Fh LBA High = C2h	threshold not exceeded	INFORMATIONAL EXCEPTION ADDITIONAL SENSE CODE = 00h, INFORMATIONAL EXCEPTION ADDITIONAL SENSE CODE QUALIFIER = 00h
LBA Mid = F4h LBA High = 2Ch	threshold exceeded	INFORMATIONAL EXCEPTION ADDITIONAL SENSE CODE = 5Dh, INFORMATIONAL EXCEPTION ADDITIONAL SENSE CODE QUALIFIER = 10h

Page: 128

Number: 1 Author: HPQ-RElliott Subject: Cross-Out Date: 9/3/2008 9:42:24 AM -07'00'

DS
Shall be set to zero

Status
moverby Accepted 11/3/2008 9:45:15 PM

Number: 2 Author: Kevin_Marks Subject: Cross-Out Date: 8/27/2008 10:44:11 AM -07'00'

Move to after page code.

Status
moverby Rejected 11/3/2008 9:45:10 PM

Number: 3 Author: Kevin_Marks Subject: Highlight Date: 8/27/2008 10:45:03 AM -07'00'

LBIN Shall be set to one
LP Shall be set to one
s/b
FORMAT AND LINKING and Shall be set to 11b

Status
moverby Accepted 11/3/2008 9:45:18 PM

Number: 4 Author: HPQ-RElliott Subject: Note Date: 9/3/2008 9:42:24 AM -07'00'

Combine LBIN and LP into FORMAT AND LINKING (2 bit field)

Status
moverby Accepted 11/3/2008 9:45:22 PM

Number: 5 Author: HPQ-RElliott Subject: Highlight Date: 9/3/2008 9:42:24 AM -07'00'

Vendor Specific
s/v
Vendor specific

Status
moverby Accepted 11/3/2008 9:45:27 PM

10.2.5.3 Most recent temperature reading translation

If the ATA device supports the SCT Feature Set (see SCT), then to translate the MOST RECENT TEMPERATURE READING field of the Informational Exceptions log page, the SATL shall send an SCT Status Request to the ATA device; and then:

a) if the HDA Temp field (see SCT) is less than zero, the SATL shall set the MOST RECENT TEMPERATURE READING field to zero;
b) if the HDA Temp field is equal to 80h, the SATL shall set the MOST RECENT TEMPERATURE READING field to FFh; or
c) the SATL shall set the MOST RECENT TEMPERATURE READING FIELD to the value in the HDA Temp field.

If the ATA device does not support the SCT feature set, then the SATL shall set the MOST RECENT TEMPERATURE READING field to FFh.

10.3 Vital product data parameters

10.3.1 Vital product data parameters overview

Table 86 provides a summary of the VPD page translations defined in this standard.

Table 86 — Summary of SCSI / ATA VPD page mapping

SCSI VPD page	Reference
Supported VPD Pages VPD page (i.e., 00h)	10.3.2
Unit Serial Number VPD page (i.e., 80h)	10.3.3
Device Identification VPD page (i.e., 83h)	10.3.4
Mode Page Policy VPD page (i.e., 87h)	10.3.5
ATA Information VPD page (i.e., 89h)	12.4.2
Block Device Characteristics VPD Page (i.e., B1h)	10.3.6
All others	See SPC-3 and SBC-2 Unspecified (see 3.4.2)

10.3.2 Supported VPD pages VPD page

Table 87 shows the fields of the Supported VPD pages VPD page.

Table 87 — Supported VPD pages VPD page fields

Field	Description or reference
PERIPHERAL DEVICE TYPE	The PERIPHERAL QUALIFIER field and the PERIPHERAL DEVICE TYPE field shall be set as described in 8.1.2.
PERIPHERAL QUALIFIER	
PAGE CODE	The SATL shall set this field to 00h.
PAGE LENGTH	The SATL shall set this field to indicate the length of the supported VPD page list returned in number of bytes.
SUPPORTED VPD LIST	This list shall contain the page codes of the pages supported by the SATL in ascending order of page codes beginning with page code 00h.

Page: 129

Number: 1 Author: Kevin_Marks Subject: Highlight Date: 8/27/2008 10:48:59 AM -07'00'

(see SCT),
s/b
(see ATA8-ACS),

Status
moverby Accepted 11/3/2008 9:45:34 PM

Number: 2 Author: Kevin_Marks Subject: Highlight Date: 8/27/2008 10:49:21 AM -07'00'

an SCT Status Request
s/b
an ATA SCT Status Request

Status
moverby Accepted 11/3/2008 9:45:38 PM

Number: 3 Author: HPQ-RElliott Subject: Note Date: 9/3/2008 9:42:24 AM -07'00'

Make the left column of table 86 wider to avoid wrapping the B1h row

Status
moverby Accepted 11/3/2008 9:45:46 PM

Number: 4 Author: Kevin_Marks Subject: Highlight Date: 8/27/2008 11:03:57 AM -07'00'

See SPC-3 and SBC-2
s/b
See SPC-4 and SBC-3

Status
moverby Accepted 11/3/2008 9:45:51 PM

Number: 5 Author: HPQ-RElliott Subject: Note Date: 9/3/2008 9:42:24 AM -07'00'

Put PERIPHERAL QUALIFIER first

Status
moverby Accepted 11/3/2008 9:46:02 PM

Number: 6 Author: HPQ-RElliott Subject: Highlight Date: 9/3/2008 9:42:24 AM -07'00'

This list shall contain the page codes of the pages supported by the SATL in ascending order of page codes beginning with page code 00h.
s/b
Unspecified (see 3.4.3)

Status
moverby Accepted 11/4/2008 11:17:09 AM

Author: moverby Subject: Sticky Note Date: 11/3/2008 9:47:38 PM

I'd prefer See SPC-4

Number: 7 Author: HPQ-RElliott Subject: Highlight Date: 9/3/2008 9:42:24 AM -07'00'

SUPPORTED VPD LIST
s/b
Supported VPD page list

Status
moverby Accepted 11/3/2008 9:47:44 PM

10.3.3 Unit Serial Number VPD page

Table 88 defines the Unit Serial Number VPD page (see SPC-3) returned by a SATL for an ATA device.

Table 88 — Unit Serial Number VPD page for SAT

Bit\Byte	7	6	5	4	3	2	1	0
0	PERIPHERAL QUALIFIER			PERIPHERAL DEVICE TYPE				
1	PAGE CODE (80h)							
2	Reserved							
3	PAGE LENGTH (14h)							
4	PRODUCT SERIAL NUMBER							
23								

The PERIPHERAL QUALIFIER field and the PERIPHERAL DEVICE TYPE field shall be set as described in 8.1.2.

The PAGE CODE field shall be set to 80h.

The PAGE LENGTH field shall be set to 14h.

The PRODUCT SERIAL NUMBER field contains a representation of the Serial number field in the ATA IDENTIFY DEVICE data (i.e., words 19:10) last retrieved from the ATA device. Each pair of bytes in the Serial number field shall be swapped to create a valid ASCII string format in the PRODUCT SERIAL NUMBER field as described in table 89.

Table 89 — PRODUCT SERIAL NUMBER field

Byte	Contents
0	IDENTIFY DEVICE word 10 bits 15:8 (i.e., byte 1)
1	IDENTIFY DEVICE word 10 bits 7:0 (i.e., byte 0)
2	IDENTIFY DEVICE word 11 bits 15:8 (i.e., byte 3)
3	IDENTIFY DEVICE word 11 bits 7:0 (i.e., byte 2)
...	...
18	IDENTIFY DEVICE word 19 bits 15:8 (i.e., byte 19)
19	IDENTIFY DEVICE word 19 bits 7:0 (i.e., byte 18)

NOTE 11 - Although SPC-3 defines the PRODUCT SERIAL NUMBER field as right-aligned, ATA8-ACS does not require its SERIAL NUMBER field to be right-aligned. Therefore, the PRODUCT SERIAL NUMBER field for SAT may not be right-aligned.

Page: 130

Number: 1 Author: Kevin_Marks Subject: Highlight Date: 8/27/2008 11:09:14 AM -07'00'

(see SPC-3)
s/b
(see SPC-4)

Status
moverby Accepted 11/3/2008 9:47:55 PM

Number: 2 Author: Kevin_Marks Subject: Highlight Date: 8/27/2008 11:11:52 AM -07'00'

Table 88 — Unit Serial Number VPD page for SAT

Why are the VPD pages shown in this format, instead of field/description or reference table?

For a VPD only defined in this standard, such as ATA page this format would be correct.

Status
moverby Accepted 11/3/2008 9:48:32 PM

Author: moverby Subject: Sticky Note Date: 11/3/2008 9:48:29 PM

Agree this should be the same as mode pages.

Number: 3 Author: HPQ-RElliott Subject: Highlight Date: 9/3/2008 9:42:24 AM -07'00'

80h
s/b
the value defined in table 88

Status
moverby Rejected 11/3/2008 9:49:02 PM

Author: moverby Subject: Sticky Note Date: 11/3/2008 9:48:59 PM

Rejected as this is moving to a table format like the mode pages.

Number: 4 Author: HPQ-RElliott Subject: Highlight Date: 9/3/2008 9:42:24 AM -07'00'

14h
s/b
the value defined in table 88

Status
moverby Rejected 11/3/2008 9:49:30 PM

Author: moverby Subject: Sticky Note Date: 11/3/2008 9:49:25 PM

Rejected as this is moving to a mode page-like table format

Number: 5 Author: Kevin_Marks Subject: Cross-Out Date: 8/27/2008 11:12:16 AM -07'00'

Status
moverby Accepted 11/3/2008 9:49:54 PM

Number: 6 Author: Kevin_Marks Subject: Cross-Out Date: 8/27/2008 11:12:23 AM -07'00'

Status
moverby Accepted 11/3/2008 9:49:50 PM

Number: 7 Author: Kevin_Marks Subject: Highlight Date: 8/27/2008 11:09:49 AM -07'00'

SPC-3
s/b
SPC-4

Status
moverby Accepted 11/3/2008 9:49:58 PM

10.3.4 Device Identification VPD page

10.3.4.1 Device Identification VPD page overview

The SATL shall return the Device Identification VPD page (see SPC-3) as defined in table 90.

Table 90 — Device Identification VPD page for SAT

Bit / Byte	7	6	5	4	3	2	1	0
0	PERIPHERAL QUALIFIER			PERIPHERAL DEVICE TYPE				
1	PAGE CODE (83h)							
2	(MSB)	PAGE LENGTH (n-3)						
3								(LSB)
4	identification descriptor for the logical unit (see table 91 and table 93)							
15								
16	Additional identification descriptor(s) (if any)							
n								

The PERIPHERAL QUALIFIER field and the PERIPHERAL DEVICE TYPE field shall be set as described in 8.1.2.

The PAGE CODE field shall be set to 83h.

The PAGE LENGTH field contains the length of the remaining bytes of the VPD page.

One identification descriptor for a logical unit (i.e., a logical unit name) shall be included (see 10.3.4.2).

In some environments, one or more additional identification descriptors may be included (see 10.3.4.3).

10.3.4.2 Logical unit name

10.3.4.2.1 Logical unit name overview

If the ATA device returns the ATA IDENTIFY DEVICE data word 87 bit 8 is set to one indicating that the ATA device supports the World wide name field (i.e., ATA IDENTIFY DEVICE data words 111:108), the SATL shall include an identification descriptor containing a logical unit name as defined in 10.3.4.2.2.

If the ATA IDENTIFY DEVICE data returned by the ATA device word 87 bit 8 is set to zero, indicating that the ATA device does not supports the support the World wide name field (i.e., ATA IDENTIFY DEVICE data words 111:108), the SATL shall include an identification descriptor containing a logical unit name as defined in 10.3.4.2.3.

Page: 131

Number: 1 Author: Kevin_Marks Subject: Highlight Date: 8/27/2008 11:18:13 AM -07'00'

(see SPC-3)
s/b
(see SPC-4)

Status
moverby Accepted 11/3/2008 9:50:05 PM

Number: 2 Author: Kevin_Marks Subject: Highlight Date: 8/27/2008 11:13:46 AM -07'00'

Table 90 — Device Identification VPD page for SAT

Why are the VPD pages shown in this format, instead of field/description or reference table?

For a VPD only defined in this standard, such as ATA page this format would be correct.

Status
moverby Accepted 11/3/2008 9:50:25 PM

Author: moverby Subject: Sticky Note Date: 11/3/2008 9:50:22 PM

Agreed - this should be like the mode page format

Number: 3 Author: HPQ-RElliott Subject: Note Date: 9/3/2008 9:42:24 AM -07'00'

Add
Designation descriptor list
with horizontal double lines
between 3-4

Status
moverby Rejected 11/3/2008 9:50:51 PM

Author: moverby Subject: Sticky Note Date: 11/3/2008 9:50:47 PM

Rejected as this is moving to a mode page like format

Number: 4 Author: HPQ-RElliott Subject: Note Date: 9/3/2008 9:42:24 AM -07'00'

Change "identification descriptor" to "designation descriptor" throughout 10.3.4

Status
moverby Rejected 11/3/2008 9:51:15 PM

Author: moverby Subject: Sticky Note Date: 11/3/2008 9:51:11 PM

Rejected as moving to a mode page like format

Number: 5 Author: Kevin_Marks Subject: Highlight Date: 8/27/2008 11:18:46 AM -07'00'

Identification
s/b
Designation

Status
moverby Accepted 11/3/2008 9:51:23 PM

Number: 6 Author: Kevin_Marks Subject: Highlight Date: 8/27/2008 11:18:57 AM -07'00'

identification
s/b
designation

Status
moverby Accepted 11/3/2008 9:51:27 PM

Number: 7 Author: HPQ-RElliott Subject: Highlight Date: 9/3/2008 9:42:24 AM -07'00'

83h
s/b
the value defined in table 90

Status
moverby Rejected 11/3/2008 9:51:44 PM

Author: moverby Subject: Sticky Note Date: 11/3/2008 9:51:39 PM

Moving to a mode page like format.

Number: 8 Author: Kevin_Marks Subject: Highlight Date: 8/27/2008 11:19:19 AM -07'00'

identification
s/b
designation

Status
moverby Accepted 11/3/2008 9:51:50 PM

Number: 9 Author: Kevin_Marks Subject: Highlight Date: 8/27/2008 11:19:32 AM -07'00'

identification
s/b
designation

Status
moverby Accepted 11/3/2008 9:51:54 PM

Number: 10 Author: Kevin_Marks Subject: Highlight Date: 8/27/2008 11:21:46 AM -07'00'

108), the
s/b
108), then the

Status
moverby Accepted 11/3/2008 9:52:01 PM

Comments from page 131 continued on next page

10.3.4 Device Identification VPD page

10.3.4.1 Device Identification VPD page overview

The SATL shall return the Device Identification VPD page (see SPC-3) as defined in table 90.

Table 90 — Device Identification VPD page for SAT

Bit / Byte	7	6	5	4	3	2	1	0
0	PERIPHERAL QUALIFIER			PERIPHERAL DEVICE TYPE				
1	PAGE CODE (83h)							
2	(MSB)	PAGE LENGTH (n-3)						
3								(LSB)
4	Identification descriptor for the logical unit (see table 91 and table 93)							
15								
16	Additional identification descriptor(s) (if any)							
n								

The PERIPHERAL QUALIFIER field and the PERIPHERAL DEVICE TYPE field shall be set as described in 8.1.2.

The PAGE CODE field shall be set to 83h.

The PAGE LENGTH field contains the length of the remaining bytes of the VPD page.

One identification descriptor for a logical unit (i.e., a logical unit name) shall be included (see 10.3.4.2).

In some environments, one or more additional identification descriptors may be included (see 10.3.4.3).

10.3.4.2 Logical unit name

10.3.4.2.1 Logical unit name overview

If the ATA device returns the ATA IDENTIFY DEVICE data word 87 bit 8 is set to one indicating that the ATA device supports the World wide name field (i.e., ATA IDENTIFY DEVICE data words 111:108), the SATL shall include an identification descriptor containing a logical unit name as defined in 10.3.4.2.2.

If the ATA IDENTIFY DEVICE data returned by the ATA device word 87 bit 8 is set to zero, indicating that the ATA device does not supports the support the World wide name field (i.e., ATA IDENTIFY DEVICE data words 111:108), the SATL shall include an identification descriptor containing a logical unit name as defined in 10.3.4.2.3.

Number: 11 Author: Kevin_Marks Subject: Highlight Date: 8/27/2008 11:22:38 AM -07'00'

identification
s/b
designation

Status
moverby Accepted 11/3/2008 9:52:05 PM

Number: 12 Author: Kevin_Marks Subject: Highlight Date: 8/27/2008 11:23:12 AM -07'00'

108), the
s/b
108), then the

Status
moverby Accepted 11/3/2008 9:52:09 PM

10.3.4.2.2 Logical unit name derived from the world wide name

Table 91 defines the logical unit name derived from the ATA device world wide name.

Table 91 — Logical unit name derived from the world wide name

Byte\Bit	7	6	5	4	3	2	1	0
0	PROTOCOL IDENTIFIER (0h)				CODE SET (1h)			
1	PIV (0b)	Reserved	ASSOCIATION (00b)		IDENTIFIER TYPE (3h)			
2	Reserved							
3	IDENTIFIER LENGTH (08h)							
4	NAA				(MSB)			
5	IEEE COMPANY_ID							
6								
7				(LSB)	(MSB)			
8	VENDOR SPECIFIC IDENTIFIER							
11								(LSB)

The PROTOCOL IDENTIFIER field shall be set to 0h.

The CODE SET field shall be set to 1h (i.e., binary).

The PIV bit shall be set to 0b.

The ASSOCIATION field shall be set to 00b (i.e., logical unit).

IDENTIFIER TYPE field shall be set to 3h (i.e., NAA).

The NAA field, the IEEE COMPANY_ID field, and the VENDOR SPECIFIC IDENTIFIER field shall be based on the ATA IDENTIFY DEVICE data World wide name field as described in table 92.

Table 92 — Fields in the logical unit name

Field		Contents
Field name	**Specific bits in table 91**	
NAA	Byte 4 bits 7:4	IDENTIFY DEVICE word 108 bits 15:12[a]
IEEE COMPANY_ID	Byte 4 bits 3:0	IDENTIFY DEVICE word 108 bits 11:8
	Byte 5	IDENTIFY DEVICE word 108 bits 7:0
	Byte 6	IDENTIFY DEVICE word 109 bits 15:8
	Byte 7 bits 7:4	IDENTIFY DEVICE word 109 bits 7:4
VENDOR SPECIFIC IDENTIFIER	Byte 7 bits 3:0	IDENTIFY DEVICE word 109 bits 3:0
	Byte 8	IDENTIFY DEVICE word 110 bits 15:8
	Byte 9	IDENTIFY DEVICE word 110 bits 7:0
	Byte 10	IDENTIFY DEVICE word 111 bits 15:8
	Byte 11	IDENTIFY DEVICE word 111 bits 7:0

[a] This 4-bit field is required to be set to 5h (i.e., IEEE Registered) by ATA8-ACS.

Page: 132

Number: 1 Author: Kevin_Marks Subject: Highlight Date: 8/27/2008 11:24:08 AM -07'00'

Table 91 — Logical unit name derived from the world wide name

Why are the VPD pages shown in this format, instead of field/description or reference table?

For a VPD only defined in this standard, such as ATA page this format would be correct.

Status
moverby Accepted 11/3/2008 9:52:29 PM

Author: moverby Subject: Sticky Note Date: 11/3/2008 9:52:26 PM

Move to a mode page like translation format

Number: 2 Author: HPQ-RElliott Subject: Highlight Date: 9/3/2008 9:42:24 AM -07'00'

IDENTIFIER TYPE
s/b
DESIGNATOR TYPE

Status
moverby Accepted 11/3/2008 9:52:41 PM

Number: 3 Author: Kevin_Marks Subject: Highlight Date: 8/27/2008 11:28:33 AM -07'00'

IDENTIFIER
s/b
DESIGNATOR

Status
moverby Accepted 11/3/2008 9:52:37 PM

Number: 4 Author: HPQ-RElliott Subject: Highlight Date: 9/3/2008 9:42:24 AM -07'00'

IDENTIFIER LENGTH
s/b
DESIGNATOR LENGTH

Status
moverby Accepted 11/3/2008 9:52:49 PM

Number: 5 Author: HPQ-RElliott Subject: Note Date: 9/3/2008 9:42:24 AM -07'00'

After table 91 and 93, change the "shall be" verbs to "is" to match wording after table 95.

Status
moverby Accepted 11/3/2008 9:53:05 PM

Number: 6 Author: Kevin_Marks Subject: Highlight Date: 8/27/2008 11:29:38 AM -07'00'

The PROTOCOL IDENTIFIER field shall be set to 0h.
The CODE SET field shall be set to 1h (i.e., binary).
The PIV bit shall be set to 0b.
The ASSOCIATION field shall be set to 00b (i.e., logical unit).
The IDENTIFIER TYPE field shall be set to 3h (i.e., NAA).

This is all stated in the table. If you are going to keep this format then change text to:

The PROTOCOL IDENTIFIER field, CODE SET field, PIV bit, ASSOCIATION field and DESIGNATOR TYPE field shall be set as shown in table 91.

Status
moverby Rejected 11/3/2008 9:53:45 PM

Author: moverby Subject: Sticky Note Date: 11/3/2008 9:53:41 PM

Not keeping this format.

Number: 7 Author: HPQ-RElliott Subject: Highlight Date: 9/3/2008 9:42:24 AM -07'00'

0h
s/b
the value defined in table 91

Status
moverby Rejected 11/3/2008 9:53:25 PM

Author: moverby Subject: Sticky Note Date: 11/3/2008 9:53:21 PM

Will be a mode-page style translation format

Number: 8 Author: HPQ-RElliott Subject: Highlight Date: 9/3/2008 9:42:24 AM -07'00'

1h
s/b
the value defined in table 91

Status
moverby Rejected 11/3/2008 9:53:51 PM

Number: 9 Author: HPQ-RElliott Subject: Highlight Date: 9/3/2008 9:42:24 AM -07'00'

0b
s/b
the value defined in table 91

Status
moverby Rejected 11/3/2008 9:53:55 PM

Number: 10 Author: HPQ-RElliott Subject: Highlight Date: 9/3/2008 9:42:24 AM -07'00'

00b
s/b

Comments from page 132 continued on next page

10.3.4.2.2 Logical unit name derived from the world wide name

Table 91 defines the logical unit name derived from the ATA device world wide name.

Table 91 — Logical unit name derived from the world wide name

Byte\Bit	7	6	5	4	3	2	1	0
0	PROTOCOL IDENTIFIER (0h)				CODE SET (1h)			
1	PIV (0b)	Reserved	ASSOCIATION (00b)		IDENTIFIER TYPE (3h)			
2	Reserved							
3	IDENTIFIER LENGTH (08h)							
4	NAA				(MSB)			
5	IEEE COMPANY_ID							
6								
7				(LSB)	(MSB)			
8	VENDOR SPECIFIC IDENTIFIER							
11								(LSB)

The PROTOCOL IDENTIFIER field shall be set to 0h.

The CODE SET field shall be set to 1h (i.e., binary).

The PIV bit shall be set to 0b.

The ASSOCIATION field shall be set to 00b (i.e., logical unit).

11 13 IDENTIFIER TYPE field shall be set to 3h (i.e., NAA).

14 The NAA field, the IEEE COMPANY_ID field, and the VENDOR SPECIFIC IDENTIFIER field shall be based on the ATA IDENTIFY DEVICE data World wide name field as described in table 92.

Table 92 — Fields in the logical unit name

Field		Contents
Field name	**Specific bits in table 91**	
NAA	Byte 4 bits 7:4	IDENTIFY DEVICE word 108 bits 15:12[a]
IEEE COMPANY_ID	Byte 4 bits 3:0	IDENTIFY DEVICE word 108 bits 11:8
	Byte 5	IDENTIFY DEVICE word 108 bits 7:0
	Byte 6	IDENTIFY DEVICE word 109 bits 15:8
	Byte 7 bits 7:4	IDENTIFY DEVICE word 109 bits 7:4
VENDOR SPECIFIC IDENTIFIER	Byte 7 bits 3:0	IDENTIFY DEVICE word 109 bits 3:0
	Byte 8	IDENTIFY DEVICE word 110 bits 15:8
	Byte 9	IDENTIFY DEVICE word 110 bits 7:0
	Byte 10	IDENTIFY DEVICE word 111 bits 15:8
	Byte 11	IDENTIFY DEVICE word 111 bits 7:0

[a] This 4-bit field is required to be set to 5h (i.e., IEEE Registered) by ATA8-ACS.

the value defined in table 91

Status
moverby Rejected 11/3/2008 9:53:59 PM

Number: 11 Author: HPQ-RElliott Subject: Note Date: 9/3/2008 9:42:24 AM -07'00'

Add
The IDENTIFIER LENGTH field shall be set to the value defined in table 91.

Status
moverby Rejected 11/3/2008 9:54:09 PM

Number: 12 Author: HPQ-RElliott Subject: Highlight Date: 9/3/2008 9:42:24 AM -07'00'

3h
s/b
the value defined in table 91

Status
moverby Rejected 11/3/2008 9:54:39 PM

Author: moverby Subject: Sticky Note Date: 11/3/2008 9:54:35 PM

As previously stated - rejected in favor of mode-page style translation table

Number: 13 Author: HPQ-RElliott Subject: Highlight Date: 9/3/2008 9:42:24 AM -07'00'

IDENTIFIER TYPE
s/b
DESIGNATOR TYPE

Status
moverby Accepted 11/3/2008 9:54:43 PM

Number: 14 Author: HPQ-RElliott Subject: Note Date: 9/3/2008 9:42:24 AM -07'00'

Add
The DESIGNATOR LENGTH field shall be set to the value defined in table 91.

Status
moverby Rejected 11/3/2008 9:55:06 PM

Author: moverby Subject: Sticky Note Date: 11/3/2008 9:55:02 PM

Rejected in favor of mode-page style translation format

10.3.4.2.3 Logical unit name derived from the model number and serial number

Table 93 defines the logical unit name derived from the ATA device model number and serial number.

Table 93 — Logical unit name derived from the model number and serial number

Byte\Bit	7	6	5	4	3	2	1	0
0	PROTOCOL IDENTIFIER (0h)				CODE SET (2h)			
1	PIV (0b)	Reserved	ASSOCIATION (00b)		IDENTIFIER TYPE (1h)			
2	Reserved							
3	IDENTIFIER LENGTH (68)							
4	VENDOR IDENTIFICATION (‘ATA¬¬¬¬¬’)							
11								
12	VENDOR SPECIFIC IDENTIFIER (see table 94)							
71								

The PROTOCOL IDENTIFIER field shall be set to 0h.

The CODE SET field shall be set to 2h (i.e., ASCII).

The PIV bit shall be set to 0b.

The ASSOCIATION field shall be set to 00b (i.e., logical unit).

The IDENTIFIER TYPE field shall be set to 1h (i.e., T10 vendor identification).

The VENDOR IDENTIFICATION field contains the string ‘ATA¬¬¬¬¬’.

The VENDOR SPECIFIC IDENTIFIER field shall be set to a representation of the ATA IDENTIFY DEVICE data Model number field concatenated with a representation of the ATA IDENTIFY DEVICE data Serial number field as described in table 94.

Table 94 — VENDOR SPECIFIC IDENTIFIER field for logical unit name

Byte	Contents	
	Source field name	Source location
0	Model number field	IDENTIFY DEVICE word 27 bits 15:8
1		IDENTIFY DEVICE word 27 bits 7:0
2		IDENTIFY DEVICE word 28 bits 15:8
...		...
39		IDENTIFY DEVICE word 46 bits 7:0
40	Serial number field	IDENTIFY DEVICE word 10 bits 15:8
41		IDENTIFY DEVICE word 10 bits 7:0
42		IDENTIFY DEVICE word 11 bits 15:8
...		...
59		IDENTIFY DEVICE word 19 bits 7:0

NOTE 12 - The logical unit name using the T10 vendor ID based format is not guaranteed to be worldwide unique, since ATA8-ACS only requires the combination of the Model number field and Serial number field to be unique for a given manufacturer but defines no manufacturer identification field.

Page: 133

Number: 1 Author: HPQ-RElliott Subject: Highlight Date: 9/3/2008 9:42:24 AM -07'00'
IDENTIFIER TYPE
s/b
DESIGNATOR TYPE

Number: 2 Author: Kevin_Marks Subject: Highlight Date: 8/27/2008 11:31:31 AM -07'00'
IDENTIFIER
s/b
DESIGNATOR

Number: 3 Author: HPQ-RElliott Subject: Highlight Date: 9/3/2008 9:42:24 AM -07'00'
IDENTIFIER LENGTH
s/b
DESIGNATOR LENGTH

Number: 4 Author: Kevin_Marks Subject: Highlight Date: 8/27/2008 11:33:13 AM -07'00'
The PROTOCOL IDENTIFIER field shall be set to 0h.
The CODE SET field shall be set to 2h (i.e., ASCII).
The PIV bit shall be set to 0b.
The ASSOCIATION field shall be set to 00b (i.e., logical unit).
The IDENTIFIER TYPE field shall be set to 1h (i.e., T10 vendor identification).
The VENDOR IDENTIFICATION field contains the string 'ATA¬¬¬¬¬'.

This is all stated in the table. If you are going to keep this format then change text to:

The PROTOCOL IDENTIFIER field, CODE SET field, PIV bit, ASSOCIATION field and DESIGNATOR TYPE field shall be set as shown in table 93.

Number: 5 Author: HPQ-RElliott Subject: Highlight Date: 9/3/2008 9:42:24 AM -07'00'
0h
s/b
the value defined in table 93

Number: 6 Author: HPQ-RElliott Subject: Highlight Date: 9/3/2008 9:42:24 AM -07'00'
2h
s/b
the value defined in table 93

Number: 7 Author: HPQ-RElliott Subject: Highlight Date: 9/3/2008 9:42:24 AM -07'00'
0b
s/b
the value defined in table 93

Number: 8 Author: HPQ-RElliott Subject: Highlight Date: 9/3/2008 9:42:24 AM -07'00'
00b
s/b
the value defined in table 93

Number: 9 Author: HPQ-RElliott Subject: Highlight Date: 9/3/2008 9:42:24 AM -07'00'
1h
s/b
the value defined in table 93

Number: 10 Author: HPQ-RElliott Subject: Highlight Date: 9/3/2008 9:42:24 AM -07'00'
IDENTIFIER TYPE
s/b
DESIGNATOR TYPE

Number: 11 Author: moverby Subject: Sticky Note Date: 9/9/2008 8:27:44 AM -07'00'
Note - the symbol is not defined and it's not clear what this is actually supposed to be set to.

Status
moverby Accepted 9/9/2008 1:46:01 PM -07'00'
Author: moverby Subject: Sticky Note Date: 9/9/2008 1:45:58 PM -07'00'
Add a reference in symbols and cross reference to the numeric section in Clause 3

Number: 12 Author: HPQ-RElliott Subject: Note Date: 9/3/2008 9:42:24 AM -07'00'
Add
The DESIGNATOR LENGTH field shall be set to the value defined in table 93.

Number: 13 Author: HPQ-RElliott Subject: Highlight Date: 9/3/2008 9:42:24 AM -07'00'
contains the string 'ATA¬¬¬¬¬'
s/b
shall be set to the value defined in table 93

Status
moverby Accepted 9/9/2008 1:46:17 PM -07'00'

Number: 14 Author: HPQ-RElliott Subject: Highlight Date: 9/3/2008 9:42:24 AM -07'00'
all be
s/b
shall be

Comments from page 133 continued on next page

10.3.4.2.3 Logical unit name derived from the model number and serial number

Table 93 defines the logical unit name derived from the ATA device model number and serial number.

Table 93 — Logical unit name derived from the model number and serial number

Byte\Bit	7	6	5	4	3	2	1	0
0	PROTOCOL IDENTIFIER (0h)				CODE SET (2h)			
1	PIV (0b)	Reserved	ASSOCIATION (00b)		IDENTIFIER TYPE (1h)			
2	Reserved							
3	IDENTIFIER LENGTH (68)							
4	VENDOR IDENTIFICATION (‘ATA¬¬¬¬¬’)							
11								
12	VENDOR SPECIFIC IDENTIFIER (see table 94)							
71								

The PROTOCOL IDENTIFIER field shall be set to 0h.

The CODE SET field shall be set to 2h (i.e., ASCII).

The PIV bit shall be set to 0b.

The ASSOCIATION field shall be set to 00b (i.e., logical unit).

The IDENTIFIER TYPE field shall be set to 1h (i.e., T10 vendor identification).

The VENDOR IDENTIFICATION field contains the string ‘ATA¬¬¬¬¬’.

The VENDOR SPECIFIC IDENTIFIER field all be set to a representation of the ATA IDENTIFY DEVICE data Model number field concatenated with a representation of the ATA IDENTIFY DEVICE data Serial number field as described in table 94.

Table 94 — VENDOR SPECIFIC IDENTIFIER field for logical unit name

Byte	Contents	
	Source field name	Source location
0	Model number field	IDENTIFY DEVICE word 27 bits 15:8
1		IDENTIFY DEVICE word 27 bits 7:0
2		IDENTIFY DEVICE word 28 bits 15:8
...		...
39		IDENTIFY DEVICE word 46 bits 7:0
40	Serial number field	IDENTIFY DEVICE word 10 bits 15:8
41		IDENTIFY DEVICE word 10 bits 7:0
42		IDENTIFY DEVICE word 11 bits 15:8
...		...
59		IDENTIFY DEVICE word 19 bits 7:0

NOTE 12 - The logical unit name using the T10 vendor ID based format is not guaranteed to be worldwide unique, since ATA8-ACS only requires the combination of the Model number field and Serial number field to be unique for a given manufacturer but defines no manufacturer identification field.

10.3.4.3 Examples of additional identification descriptors

10.3.4.3.1 Identification descriptors included by a SATL in an ATA host

Figure 9 shows the identification descriptor returned by a SATL in an ATA host (i.e., where the ATA device is being accessed with an ATA host port) containing a logical unit name based on ATA IDENTIFY DEVICE data (see table 91 or table 93 in 10.3.4.2).

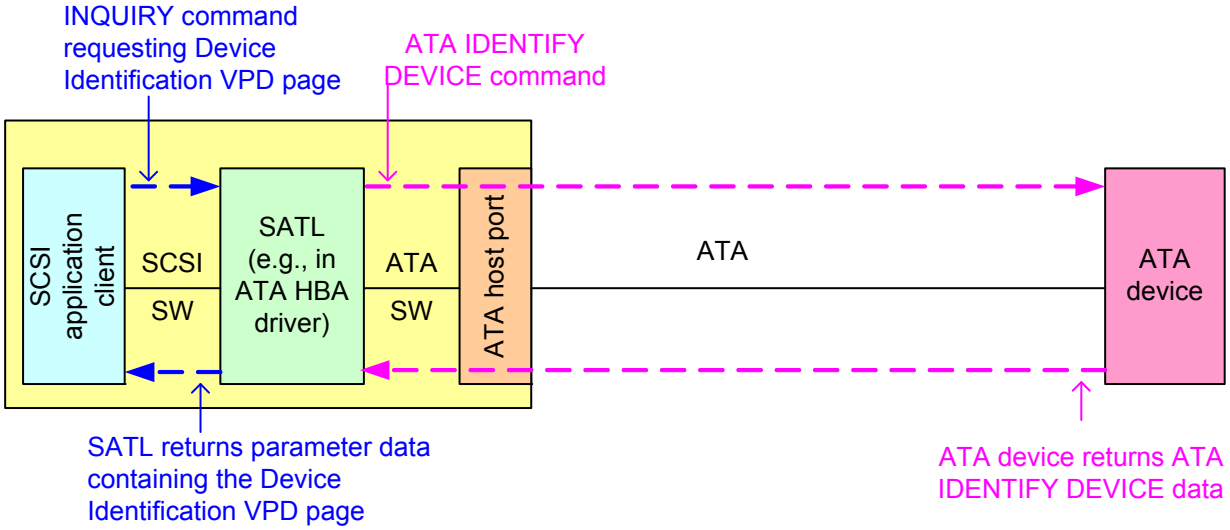

Figure 9 — identification descriptors included by a SATL in an ATA host

10.3.4.3.2 identification descriptors included by a SATL in a SAS initiator device

Figure 10 shows the identification descriptors returned by a SATL in a SAS initiator device (i.e., where the ATA device is being accessed by a SAS STP initiator port through an STP/SATA bridge):

a) a logical unit name based on ATA IDENTIFY DEVICE data (see table 91 or table 93 in 10.3.4.2);
b) a target port identifier based on the SAS STP target port SAS address (see table 95); and
c) a relative target port identifier set to 0001h (see SPC-3).

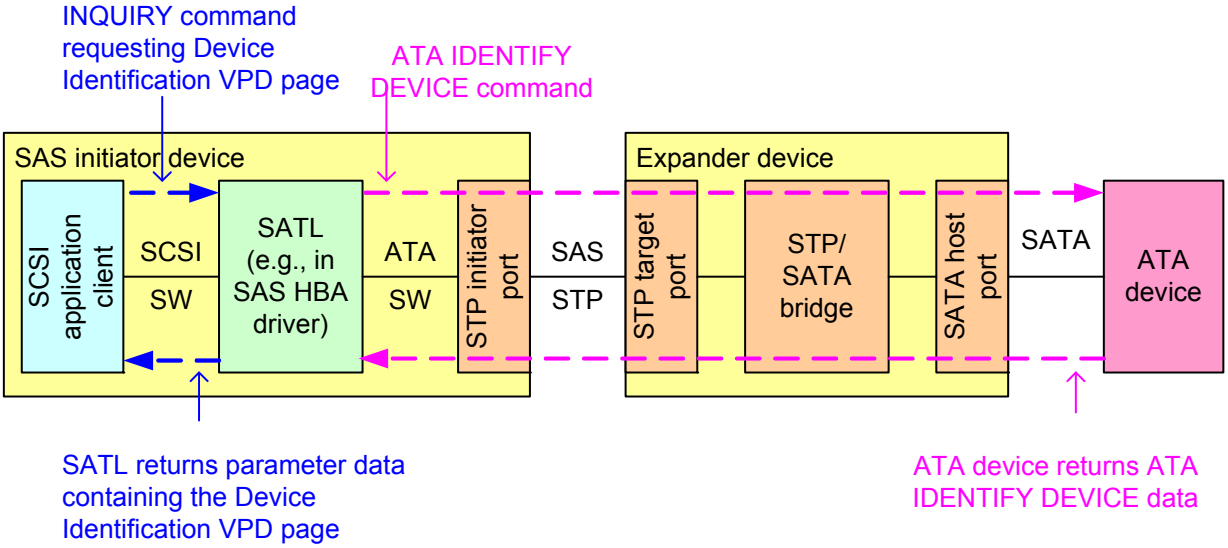

Figure 10 — identification descriptors included by a SATL in a SAS initiator device

Page: 134

Number: 1 Author: Kevin_Marks Subject: Highlight Date: 8/27/2008 11:35:19 AM -07'00'

identification
s/b
designation

Status
moverby Accepted 11/3/2008 9:55:14 PM

Number: 2 Author: Kevin_Marks Subject: Highlight Date: 8/27/2008 11:35:32 AM -07'00'

identification
s/b
designation

Status
moverby Accepted 11/3/2008 9:55:17 PM

Number: 3 Author: Kevin_Marks Subject: Highlight Date: 8/27/2008 11:36:05 AM -07'00'

Identification
s/b
Designation

Status
moverby Accepted 11/3/2008 9:55:20 PM

Number: 4 Author: Kevin_Marks Subject: Highlight Date: 8/27/2008 11:36:18 AM -07'00'

Identification
s/b
Designation

Status
moverby Accepted 11/3/2008 9:55:23 PM

Number: 5 Author: Kevin_Marks Subject: Highlight Date: 8/27/2008 11:36:26 AM -07'00'

identification
s/b
s/b
designation

Status
moverby Accepted 11/3/2008 9:55:27 PM

Number: 6 Author: LSI-Penokie Subject: Highlight Date: 8/20/2008 2:31:21 PM -07'00'

This should be << SATA bridge) that contain: >>

Status
moverby Accepted 11/3/2008 9:55:38 PM

Number: 7 Author: Kevin_Marks Subject: Highlight Date: 8/27/2008 11:38:25 AM -07'00'

(see SPC-3).
s/b
(see SPC-4).

Status
moverby Accepted 11/3/2008 9:55:41 PM

Number: 8 Author: Kevin_Marks Subject: Highlight Date: 8/27/2008 11:40:16 AM -07'00'

Identification
s/b
Designation

Status
moverby Accepted 11/3/2008 9:55:49 PM

The SATL includes a target port identifier as defined in table 95.

Table 95 — Target port identifier for SAS

Byte\Bit	7	6	5	4	3	2	1	0
0	PROTOCOL IDENTIFIER (6h)				CODE SET (1h)			
1	PIV (1b)	Reserved	ASSOCIATION (01b)		IDENTIFIER TYPE (3h)			
2	Reserved							
3	IDENTIFIER LENGTH (08h)							
4	SAS ADDRESS							
11								

The CODE SET field is set to 1h (i.e., binary).

The PIV bit is set to one.

The ASSOCIATION field is set to 01b (i.e., target port).

The IDENTIFIER TYPE field is set to 3h (i.e., NAA).

The SAS ADDRESS field is set to the SAS address of the STP target port providing the STP/SATA bridge functionality (i.e., the SAS address of the SATA device).

10.3.4.3.3 Identification descriptors included by a SATL in a SCSI to ATA protocol bridge

Figure 11 shows the identification descriptors returned by a SATL in a SCSI to ATA protocol bridge, where the ATA device is being accessed by an ATA host port, and the SATL is being accessed with a SCSI target port using a SCSI transport protocol ~~(e.g, FCP-3 or iSCSI):~~

a) a logical unit name based on ATA IDENTIFY DEVICE data (see table 91 or table 93 in 10.3.4.2);
b) any target port identifiers specified by the SCSI transport protocol standard ~~(e.g., for FCP-3, the SATL includes an identifier with identifier type 3h (i.e., NAA) containing the Port_Name, and may include an identifier with identifier type 4h (i.e., relative target port identifier));~~ and
c) any other identification descriptors supported by the protocol bridge (e.g., a target device name).

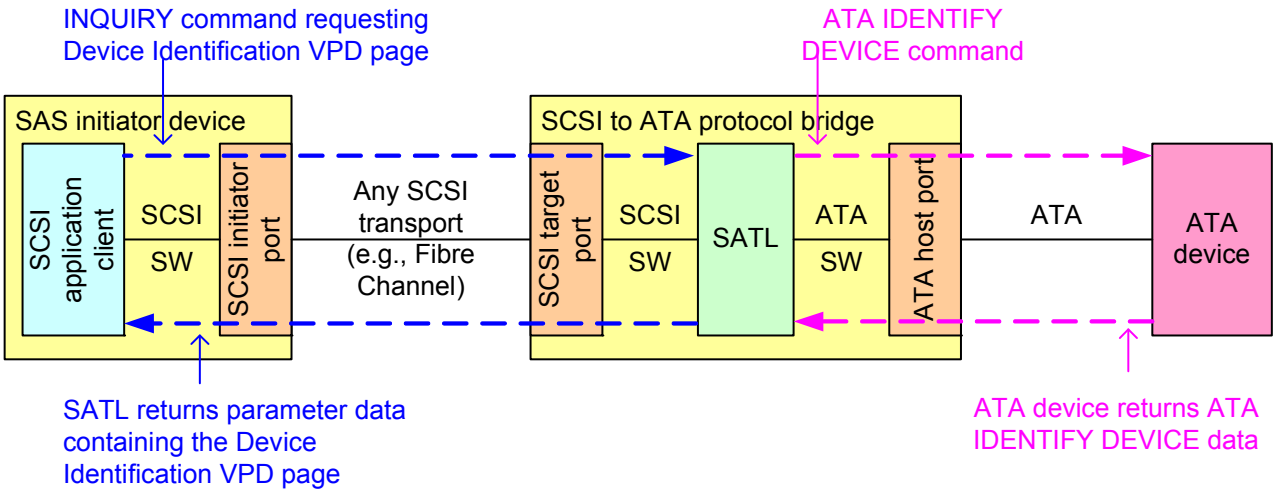

Figure 11 — Identification descriptors included by a SATL in a SCSI to ATA protocol bridge

Page: 135

Number: 1 Author: HPQ-RElliott Subject: Highlight Date: 9/3/2008 9:42:24 AM -07'00'

IDENTIFIER TYPE
s/b
DESIGNATOR TYPE

Status
moverby Accepted 11/3/2008 9:56:01 PM

Number: 2 Author: Kevin_Marks Subject: Highlight Date: 8/27/2008 11:41:07 AM -07'00'

IDENTIFIER
s/b
DESIGNATOR

Status
moverby Accepted 11/3/2008 9:55:58 PM

Number: 3 Author: HPQ-RElliott Subject: Highlight Date: 9/3/2008 9:42:24 AM -07'00'

IDENTIFIER LENGTH
s/b
DESIGNATOR LENGTH

Status
moverby Accepted 11/3/2008 9:56:05 PM

Number: 4 Author: Kevin_Marks Subject: Highlight Date: 8/27/2008 11:41:53 AM -07'00'

The CODE SET field is set to 1h (i.e., binary).
The PIV bit is set to one.
The ASSOCIATION field is set to 01b (i.e., target port).
The IDENTIFIER TYPE field is set to 3h (i.e., NAA).

This is all stated in the table. If you are going to keep this format then change text to:

The PROTOCOL IDENTIFIER field, CODE SET field, PIV bit, ASSOCIATION field and DESIGNATOR TYPE field shall be set as shown in table 95.

Status
moverby Rejected 11/3/2008 9:56:25 PM
Author: moverby Subject: Sticky Note Date: 11/3/2008 9:56:20 PM
Not keeping format

Number: 5 Author: HPQ-RElliott Subject: Highlight Date: 9/3/2008 9:42:24 AM -07'00'

1h
s/b
the value defined in table 95

Status
moverby Rejected 11/3/2008 9:59:00 PM
Author: moverby Subject: Sticky Note Date: 11/3/2008 9:58:56 PM
Not keeping table format

Number: 6 Author: HPQ-RElliott Subject: Highlight Date: 9/3/2008 9:42:24 AM -07'00'

one
s/b
the value defined in table 95

Status
moverby Rejected 11/3/2008 9:56:46 PM
Author: moverby Subject: Sticky Note Date: 11/3/2008 9:56:43 PM
Not keeping table format

Number: 7 Author: HPQ-RElliott Subject: Highlight Date: 9/3/2008 9:42:24 AM -07'00'

01b
s/b
the value defined in table 95

Status
moverby Rejected 11/3/2008 9:56:55 PM
Author: moverby Subject: Sticky Note Date: 11/3/2008 9:56:51 PM
Not keeping table format

Number: 8 Author: HPQ-RElliott Subject: Highlight Date: 9/3/2008 9:42:24 AM -07'00'

3h
s/b
the value defined in table 95

Status
moverby Rejected 11/3/2008 9:57:03 PM
Author: moverby Subject: Sticky Note Date: 11/3/2008 9:57:00 PM
Not keeping table format

Number: 9 Author: HPQ-RElliott Subject: Highlight Date: 9/3/2008 9:42:24 AM -07'00'

IDENTIFIER TYPE
s/b
DESIGNATOR TYPE

Comments from page 135 continued on next page

The SATL includes a target port identifier as defined in table 95.

Table 95 — Target port identifier for SAS

Byte\Bit	7	6	5	4	3	2	1	0
0	PROTOCOL IDENTIFIER (6h)				CODE SET (1h)			
1	PIV (1b)	Reserved	ASSOCIATION (01b)		IDENTIFIER TYPE (3h)			
2	Reserved							
3	IDENTIFIER LENGTH (08h)							
4	SAS ADDRESS							
11								

The CODE SET field is set to 1h (i.e., binary).

The PIV bit is set to one.

The ASSOCIATION field is set to 01b (i.e., target port).

The IDENTIFIER TYPE field is set to 3h (i.e., NAA).

10 The SAS ADDRESS field is set to the SAS address of the STP target port providing the STP/SATA bridge functionality (i.e., the SAS address of the SATA device).

10.3.4.3.3 12 Identification descriptors included by a SATL in a SCSI to ATA protocol bridge

Figure 11 shows the 13 identification descriptors returned by a SATL in a SCSI to ATA protocol bridge, where the ATA device is being accessed by an ATA host port, and the SATL is being accessed with a SCSI target port using a SCSI transport 15 protocol 14 ~~(e.g, FCP-3 or iSCSI):~~

a) a logical unit name based on ATA IDENTIFY DEVICE data (see table 91 or table 93 in 10.3.4.2);
b) any target port identifiers specified by the SCSI transport protocol standard 16 ~~(e.g., for FCP-3, the SATL includes an 17 identifier with 18 identifier type 3h (i.e., NAA) containing the Port_Name, and may include an 19 identifier with 20 identifier type 4h (i.e., relative target port identifier));~~ and
c) any other 21 identification descriptors supported by the protocol bridge (e.g., a target device name).

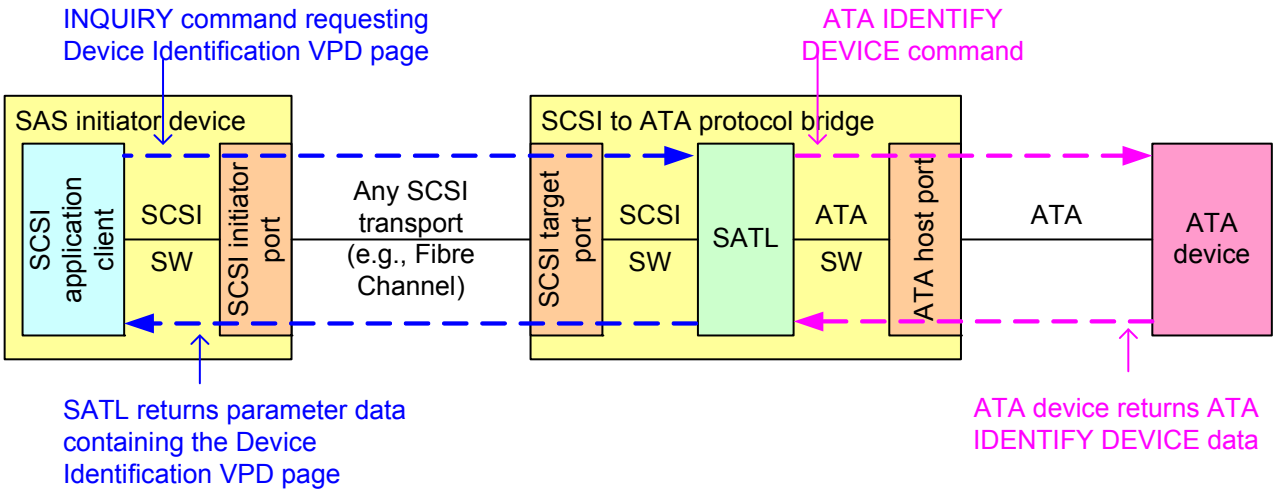

Figure 11 — 22 Identification descriptors included by a SATL in a SCSI to ATA protocol bridge

Status
moverby Accepted 11/3/2008 9:57:08 PM
Number: 10 Author: HPQ-RElliott Subject: Note Date: 9/3/2008 9:42:24 AM -07'00'
Add
The DESIGNATOR LENGTH field is set to the value defined in table 95.

Status
moverby Rejected 11/3/2008 9:57:17 PM
Author: moverby Subject: Sticky Note Date: 11/3/2008 9:57:14 PM
Not keeping table format

Number: 11 Author: Kevin_Marks Subject: Highlight Date: 8/27/2008 11:43:11 AM -07'00'
Identification
s/b
Designation

Status
moverby Accepted 11/3/2008 9:57:34 PM
Number: 12 Author: Kevin_Marks Subject: Highlight Date: 8/27/2008 11:42:45 AM -07'00'
Identification

Status
moverby Rejected 11/3/2008 9:57:51 PM
Author: moverby Subject: Sticky Note Date: 11/3/2008 9:57:47 PM
No change requested in comment

Number: 13 Author: Kevin_Marks Subject: Highlight Date: 8/27/2008 11:43:29 AM -07'00'
identification
s/b
designation

Status
moverby Accepted 11/3/2008 9:57:56 PM
Number: 14 Author: moverby Subject: Cross-Out Date: 9/9/2008 9:39:41 AM -07'00'

Status
moverby Accepted 11/3/2008 9:58:01 PM
Number: 15 Author: LSI-Penokie Subject: Highlight Date: 8/20/2008 2:48:08 PM -07'00'
The sentence leading into the a,b,c list has no lead into the a.b.c list and I can't figure out how to change it to make it read correctly. This needs to be fixed.

Status
moverby Accepted 11/4/2008 11:20:16 AM
Author: moverby Subject: Sticky Note Date: 11/4/2008 11:20:14 AM
Add with before :

Number: 16 Author: moverby Subject: Cross-Out Date: 9/9/2008 9:39:57 AM -07'00'

Status
moverby Accepted 11/3/2008 9:58:27 PM
Number: 17 Author: Kevin_Marks Subject: Highlight Date: 8/27/2008 11:45:32 AM -07'00'
identifier
s/b
designator

Status
moverby Accepted 11/3/2008 9:58:35 PM
Number: 18 Author: Kevin_Marks Subject: Highlight Date: 8/27/2008 11:45:36 AM -07'00'
identifier
s/b
designator

Status
moverby Accepted 11/3/2008 9:58:31 PM
Number: 19 Author: Kevin_Marks Subject: Highlight Date: 8/27/2008 11:45:46 AM -07'00'
identifier
s/b
designator

Status
moverby Accepted 11/3/2008 9:58:42 PM
Number: 20 Author: Kevin_Marks Subject: Highlight Date: 8/27/2008 11:45:50 AM -07'00'
identifier
s/b
designator

Status
moverby Accepted 11/3/2008 9:58:38 PM
Number: 21 Author: Kevin_Marks Subject: Highlight Date: 8/27/2008 11:46:01 AM -07'00'
identification
s/b
designation

Status
moverby Accepted 11/3/2008 9:58:45 PM
Number: 22 Author: Kevin_Marks Subject: Highlight Date: 8/27/2008 11:46:24 AM -07'00'
Identification
s/b
s/b

Comments from page 135 continued on next page

The SATL includes a target port identifier as defined in table 95.

Table 95 — Target port identifier for SAS

Byte\Bit	7	6	5	4	3	2	1	0
0	PROTOCOL IDENTIFIER (6h)				CODE SET (1h)			
1	PIV (1b)	Reserved	ASSOCIATION (01b)		IDENTIFIER TYPE (3h)			
2	Reserved							
3	IDENTIFIER LENGTH (08h)							
4	SAS ADDRESS							
11								

The CODE SET field is set to 1h (i.e., binary).

The PIV bit is set to one.

The ASSOCIATION field is set to 01b (i.e., target port).

The IDENTIFIER TYPE field is set to 3h (i.e., NAA).

The SAS ADDRESS field is set to the SAS address of the STP target port providing the STP/SATA bridge functionality (i.e., the SAS address of the SATA device).

10.3.4.3.3 Identification descriptors included by a SATL in a SCSI to ATA protocol bridge

Figure 11 shows the identification descriptors returned by a SATL in a SCSI to ATA protocol bridge, where the ATA device is being accessed by an ATA host port, and the SATL is being accessed with a SCSI target port using a SCSI transport protocol ~~(e.g, FCP-3 or iSCSI):~~

a) a logical unit name based on ATA IDENTIFY DEVICE data (see table 91 or table 93 in 10.3.4.2);
b) any target port identifiers specified by the SCSI transport protocol standard ~~(e.g., for FCP-3, the SATL includes an identifier with identifier type 3h (i.e., NAA) containing the Port_Name, and may include an identifier with identifier type 4h (i.e., relative target port identifier));~~ and
c) any other identification descriptors supported by the protocol bridge (e.g., a target device name).

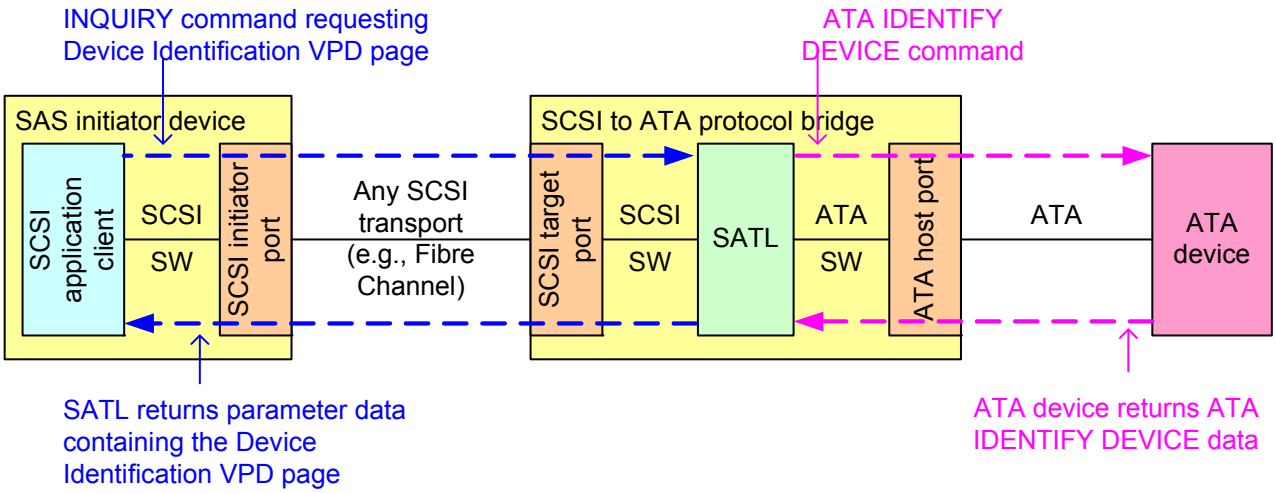

Figure 11 — Identification descriptors included by a SATL in a SCSI to ATA protocol bridge

Designation

Status

moverby	Accepted	11/3/2008 9:58:49 PM

10.3.5 Mode Page Policy VPD page

The SATL should implement the Mode Page Policy VPD page for each logical unit emulated (see SPC-3). Table 96 defines the Mode Page Policy VPD page (see SPC-3) returned by the SATL.

Table 96 — Mode Page Policy VPD page for SAT

Byte\Bit	7	6	5	4	3	2	1	0
0	PERIPHERAL QUALIFIER			PERIPHERAL DEVICE TYPE				
1	PAGE CODE (87h)							
2	PAGE LENGTH (n-3)							
3								
	Mode page policy descriptor list							
4	Mode page policy descriptor (first)							
7								
• • •	• • •							
n-3	Mode page policy descriptor (last)							
n								

The PERIPHERAL QUALIFIER FIELD and the peripheral device type field shall be set as described in 8.1.2.

The PAGE CODE field shall be set to 87h.

The PAGE LENGTH FIELD is unspecified (see 3.4.2).

If the SATL implements the Mode Page Policy VPD page, then the SATL shall include at least one mode page policy descriptor (see table 97).

Table 97 — Mode policy descriptor for SAT

Byte\Bit	7	6	5	4	3	2	1	0
0	Reserved		POLICY PAGE CODE					
1	POLICY SUBPAGE CODE							
2	MLUS	Reserved					MODE PAGE POLICY	
3	Reserved							

The POLICY PAGE CODE field, the POLICY SUBPAGE CODE field, the multiple logical units share (i.e., MLUS) bit, and MODE PAGE POLICY field are unspecified (see 3.4.2 and SPC-3).

10.3.6 Block Device Characteristics VPD Page

Table 98 shows the translation of fields in the block device characteristics VPD page.

Page: 136

Number: 1 Author: Kevin_Marks Subject: Highlight Date: 8/27/2008 11:47:49 AM -07'00'
(see SPC-3).
s/b
(see SPC-4).

Status
moverby Accepted 11/3/2008 9:59:06 PM

Number: 2 Author: Kevin_Marks Subject: Highlight Date: 8/27/2008 11:47:57 AM -07'00'
(see SPC-3)
s/b
(see SPC-4)

Status
moverby Accepted 11/3/2008 9:59:10 PM

Number: 3 Author: Kevin_Marks Subject: Highlight Date: 8/27/2008 11:49:05 AM -07'00'
Table 96 — Mode Page Policy VPD page for SAT

Why are the VPD pages shown in this format, instead of field/description or reference table?

For a VPD only defined in this standard, such as ATA page this format would be correct.

Status
moverby Accepted 11/3/2008 9:59:27 PM
Author: moverby Subject: Sticky Note Date: 11/3/2008 9:59:23 PM
Will change format to mode-page style translation

Number: 4 Author: HPQ-RElliott Subject: Highlight Date: 9/3/2008 9:42:24 AM -07'00'
FIELD
s/b
lowercase

Status
moverby Accepted 11/3/2008 10:13:57 PM

Number: 5 Author: HPQ-RElliott Subject: Highlight Date: 9/3/2008 9:42:24 AM -07'00'
peripheral device type
s/b
smallcaps

Status
moverby Accepted 11/3/2008 10:13:53 PM

Number: 6 Author: Kevin_Marks Subject: Highlight Date: 8/27/2008 11:50:49 AM -07'00'
The PAGE CODE field shall be set to 87h.
s/b
The PAGE CODE field shall be set as shown in table 96.

Status
moverby Rejected 11/3/2008 10:14:31 PM
Author: moverby Subject: Sticky Note Date: 11/3/2008 10:14:27 PM
Not keeping table format

Number: 7 Author: HPQ-RElliott Subject: Highlight Date: 9/3/2008 9:42:24 AM -07'00'
87h
s/b
the value defined in table 96

Status
moverby Rejected 11/3/2008 10:14:19 PM
Author: moverby Subject: Sticky Note Date: 11/3/2008 10:14:15 PM
Not keeping table format

Number: 8 Author: HPQ-RElliott Subject: Highlight Date: 9/3/2008 9:42:24 AM -07'00'
FIELD
s/b
lowercase

Status
moverby Accepted 11/3/2008 10:14:36 PM

Number: 9 Author: Kevin_Marks Subject: Highlight Date: 8/27/2008 11:55:10 AM -07'00'
Table 97 — Mode policy descriptor for SAT

Section 10.10.1 has a bunch of should's for these fields, but I see no reference to it here? Add a See 10.1.1 somewhere in this section

If not, then including the translation of this page code is useless. All fields unspecified expect page code :)

Status
moverby Accepted 11/3/2008 10:16:50 PM
Author: moverby Subject: Sticky Note Date: 11/3/2008 10:16:46 PM
Add see 10.1.1

Number: 10 Author: Kevin_Marks Subject: Highlight Date: 8/27/2008 11:55:28 AM -07'00'
SPC-3)
s/b

Comments from page 136 continued on next page

10.3.5 Mode Page Policy VPD page

The SATL should implement the Mode Page Policy VPD page for each logical unit emulated (see SPC-3). Table 96 defines the Mode Page Policy VPD page (see SPC-3) returned by the SATL.

Table 96 — Mode Page Policy VPD page for SAT

Byte\Bit	7	6	5	4	3	2	1	0
0	PERIPHERAL QUALIFIER			PERIPHERAL DEVICE TYPE				
1	PAGE CODE (87h)							
2	PAGE LENGTH (n-3)							
3								
	Mode page policy descriptor list							
4	Mode page policy descriptor (first)							
7								
• • •	• • •							
n-3	Mode page policy descriptor (last)							
n								

The PERIPHERAL QUALIFIER FIELD and the peripheral device type field shall be set as described in 8.1.2.

The PAGE CODE field shall be set to 87h.

The PAGE LENGTH FIELD is unspecified (see 3.4.2).

If the SATL implements the Mode Page Policy VPD page, then the SATL shall include at least one mode page policy descriptor (see table 97).

Table 97 — Mode policy descriptor for SAT

Byte\Bit	7	6	5	4	3	2	1	0
0	Reserved		POLICY PAGE CODE					
1	POLICY SUBPAGE CODE							
2	MLUS	Reserved					MODE PAGE POLICY	
3	Reserved							

The POLICY PAGE CODE field, the POLICY SUBPAGE CODE field, the multiple logical units share (i.e., MLUS) bit, and MODE PAGE POLICY field are unspecified (see 3.4.2 and SPC-3).

10.3.6 Block Device Characteristics VPD Page

Table 98 shows the translation of fields in the 11 block device characteristics VPD page.

SPC-4)

Status
moverby Accepted 11/3/2008 10:16:54 PM

Number: 11 Author: HPQ-RElliott Subject: Highlight Date: 9/3/2008 9:42:24 AM -07'00'

block device characteristics
s/b
mixed case

Status
moverby Accepted 11/3/2008 10:17:02 PM

Table 98 — Block Device Characteristics VPD Page Field Translation

Field	Description or Reference
ERHIPHERAL DEVICE TYPE	The PERIPHERAL QUALIFIER field and the PERIPHERAL DEVICE type field shall be set as described in 8.1.2.
PERIPHERAL QUALIFIER	
PAGE CODE	~~The SATL~~ shall set this field to B1h.
PAGE LENGTH	~~The SATL~~ shall set this field to 3Ch.
MEDIUM ROTATION RATE	The SATL shall set this field to the value of ATA IDENTIFY DEVICE data word 217.
NOMINAL FORM FACTOR	The SATL shall set this field to the value of ATA IDENTIFY DEVICE data word 168 bits 3:0.

Page: 137

Number: 1 Author: Kevin_Marks Subject: Highlight Date: 8/27/2008 11:56:12 AM -07'00'

Table 98 — Block Device Characteristics VPD Page Field Translation

Back to Field / Description or Reference format

Status
moverby Rejected 11/3/2008 10:17:37 PM

Author: moverby Subject: Sticky Note Date: 11/3/2008 10:17:33 PM

Keep field / description format

Number: 2 Author: HPQ-RElliott Subject: Highlight Date: 9/3/2008 9:42:24 AM -07'00'

Field Translation
s/b
lowercase and plural

Status
moverby Accepted 11/3/2008 10:17:15 PM

Number: 3 Author: HPQ-RElliott Subject: Highlight Date: 9/3/2008 9:42:24 AM -07'00'

PERHIPHERAL
s/b
PERIPHERAL

Status
moverby Accepted 11/3/2008 10:17:44 PM

Number: 4 Author: HPQ-RElliott Subject: Highlight Date: 9/3/2008 9:42:24 AM -07'00'

PERIPHERAL DEVICE type
s/b
smallcaps

Status
moverby Accepted 11/3/2008 10:20:11 PM

Number: 5 Author: Kevin_Marks Subject: Cross-Out Date: 8/27/2008 12:56:42 PM -07'00'

Status
moverby Accepted 11/3/2008 10:20:40 PM

Author: moverby Subject: Sticky Note Date: 11/3/2008 10:20:37 PM

Change to Shall be set to ...

Number: 6 Author: Kevin_Marks Subject: Cross-Out Date: 8/27/2008 12:56:44 PM -07'00'

Status
moverby Accepted 11/3/2008 10:20:57 PM

Author: moverby Subject: Sticky Note Date: 11/3/2008 10:20:54 PM

Change to Shall be set to

Number: 7 Author: Kevin_Marks Subject: Highlight Date: 8/27/2008 1:00:52 PM -07'00'

value of
s/b
value contained in the

Status
moverby Accepted 11/3/2008 10:21:05 PM

Number: 8 Author: Kevin_Marks Subject: Highlight Date: 8/27/2008 1:00:56 PM -07'00'

value of
s/b
value contained in the

Status
moverby Accepted 11/3/2008 10:21:09 PM

Number: 9 Author: HPQ-RElliott Subject: Note Date: 9/3/2008 9:42:24 AM -07'00'

The medium rotation rate needs to be treated as a 16-bit value and have its endianness converted (bytes swapped). SBC-3 revision 16 incorrectly omits the (MSB)/(LSB) labels, which might lead someone into byte preserving rather than byte swapping.

To avoid endianness confusion, I recommend a table like table 94 be added, specifying exactly where each byte goes.

SCSI byte 4 = ATA word 217 bits 15:8
SCSI byte 5 = ATA word 217 bits 7:0

Status
moverby Rejected 9/9/2008 1:51:27 PM -07'00'

Author: moverby Subject: Sticky Note Date: 9/9/2008 1:51:23 PM -07'00'

Rejecting in favor of fixing SBC-3 (SAT-2 editor to write a proposal against SBC-3)

11 Error and sense reporting

~~11.1 Error translation – ATA device error to SCSI error map~~

ATA device errors are translated to the appropriate SCSI errors. The ATA Status register and Error register bit settings provide the information to be translated into SCSI sense key, additional sense code, and additional sense code qualifier for error reporting. Unless otherwise specified in the subclause describing the translation of a particular SCSI command, log page, mode page or VPD page, the SATL shall translate ATA device errors to SCSI errors as shown in table 99.

Table 99 — Translation of ATA errors to SCSI errors

ATA Error Register		SCSI Error	
Status	**Error[a]**	**Sense key**	**Additional sense code**
DF[b]	n/a	HARDWARE ERROR	INTERNAL TARGET FAILURE
ERR	NM	NOT READY	MEDIUM NOT PRESENT
ERR	UNC	MEDIUM ERROR	UNRECOVERED READ ERROR
ERR	WP	DATA PROTECT	WRITE PROTECTED
ERR	IDNF	ILLEGAL REQUEST[d]	LOGICAL BLOCK ADDRESS OUT OF RANGE[d]
ERR	ABRT[c]	ABORTED COMMAND	NO ADDITIONAL SENSE INFORMATION
ERR	MC	UNIT ATTENTION	NOT READY TO READY CHANGE, MEDIUM MAY HAVE CHANGED
ERR	MCR	UNIT ATTENTION	OPERATOR MEDIUM REMOVAL REQUEST
ERR	ICRC	ABORTED COMMAND	INFORMATION UNIT iuCRC ERROR DETECTED
CORR	n/a	This condition is not considered an error.	

[a] If the Error register has an obsolete bit set to one, the SATL may return a vendor-specific additional sense code (e.g., if the AMNF bit is set to one, return MEDIUM ERROR - ADDRESS MARK NOT FOUND FOR DATA FIELD).

[b] After an ATA device returns a DF bit set to one, the SATL processes any subsequent commands received for the emulated logical unit corresponding to the ATA device by terminating the command with CHECK CONDITION status with the sense key set to HARDWARE ERROR and the additional sense code set to INTERNAL TARGET FAILURE.

[c] The ABRT bit is ignored if any other ATA error bit is set.

[d] SATLs compliant with previous versions of this standard return a sense key of MEDIUM ERROR and an additional sense code of RECORD NOT FOUND.

Page: 138

Number: 1 Author: HPQ-RElliott Subject: Highlight Date: 9/3/2008 9:42:24 AM -07'00'

Change:
Error and sense reporting
to:
Translation of ATA errors to SCSI errors

Status
moverby Accepted 11/3/2008 10:21:47 PM

Number: 2 Author: HPQ-RElliott Subject: Note Date: 9/3/2008 9:42:24 AM -07'00'

Consider moving 11 into 5.xx, since it is only one page long.

Status
moverby Rejected 11/3/2008 10:22:26 PM

Author: moverby Subject: Sticky Note Date: 11/3/2008 10:22:22 PM

Rejecting. I understand the point, but I think it would just confuse people to move it at this point for little gain.

Number: 3 Author: HPQ-RElliott Subject: Cross-Out Date: 9/3/2008 9:42:24 AM -07'00'

Delete the level

11.1 Error translation – ATA device error to SCSI error map

since there is no 11.2

Status
moverby Accepted 11/3/2008 10:21:55 PM

12 SAT-specific SCSI extensions

12.1 SAT-specific SCSI extensions overview

This subclause defines additional SCSI commands, mode pages and VPD pages that may be supported by a SATL to provide capabilities beyond those defined in the other SCSI command sets.

SCSI commands defined for SATL implementations include:

a) ATA PASS-THROUGH (12) command (see 12.2.2); and
b) ATA PASS-THROUGH (16) command (see 12.2.3).

Mode pages defined for SATL implementations include:

a) PATA Control mode page (see 12.3.2).

Vital Product Data pages defined for SATL implementations include:

a) ATA Information VPD page (see 12.4.2).

12.2 ATA PASS-THROUGH commands

12.2.1 ATA PASS-THROUGH commands overview

ATA PASS-THROUGH commands provide a method for:

a) an application client to transmit an ATA command to an ATA device;
b) optionally, transferring data between an application client and an ATA device; and
c) an ATA device to transfer completion status through the SATL.

This is accomplished by defining:

a) CDBs containing ATA command information (see 12.2.2 and 12.2.3); and
b) specific SCSI status and sense data usage for returning the results of an ATA command (see 12.2.5).

Page: 139

Number: 1 Author: HPQ-RElliott Subject: Note Date: 9/3/2008 9:42:24 AM -07'00'

Consider moving 12.2 (SAT-specific SCSI commands) into its own top level section (after 9), and moving 12.3 (mode pages), 12.4 (VPD pages), and 12.5 (security protocols) into section 10.xx.

Status
moverby Rejected 11/3/2008 10:23:09 PM

Author: moverby Subject: Sticky Note Date: 11/3/2008 10:23:05 PM

We discussed in SAT-1 and there was a strong desire to keep SAT-specific material separated from translations of non-SAT specific material.

Number: 2 Author: LSI-Penokie Subject: Highlight Date: 8/20/2008 2:53:46 PM -07'00'

This should be << This clause defines additional >>

Status
moverby Accepted 11/3/2008 10:23:35 PM

Number: 3 Author: HPQ-RElliott Subject: Highlight Date: 9/3/2008 9:42:24 AM -07'00'

mode pages and VPD pages

add "security protocols" to cover 12.5.

Add an introductory paragraph for security protocols after the VPD paragraph.

Status
moverby Accepted 11/3/2008 10:23:21 PM

Number: 4 Author: HPQ-RElliott Subject: Highlight Date: 9/3/2008 9:42:24 AM -07'00'

In the mode page list, add ATA Power Condition mode page to cover 12.3.3.

Status
moverby Accepted 11/3/2008 10:24:02 PM

Number: 5 Author: ENDL Texas Subject: Highlight Date: 8/27/2008 10:21:09 AM -07'00'

2nd to last line in subclause
Vital Product Data s/b VPD

Status
moverby Accepted 11/3/2008 10:24:08 PM

Number: 6 Author: HPQ-RElliott Subject: Note Date: 9/3/2008 9:42:24 AM -07'00'

Incorporate:
08-344r0 SAT-2 ATA PASS-THROUGH sense data format

to stop returning descriptor format sense data to applications expecting fixed format sense data.

Status
moverby Accepted 11/3/2008 10:24:15 PM

12.2.2 ATA PASS-THROUGH (12) command

Table 100 shows the CDB for the ATA PASS-THROUGH (12) command.

Table 100 — ATA PASS-THROUGH (12) command

Byte\Bit	7	6	5	4	3	2	1	0
0	OPERATION CODE (A1h)							
1	MULTIPLE_COUNT			PROTOCOL				Reserved
2	OFF_LINE		CK_COND	Reserved	T_DIR	BYTE_BLOCK	T_LENGTH	
3	FEATURES (7:0)							
4	SECTOR_COUNT (7:0)							
5	LBA_LOW (7:0)							
6	LBA_MID (7:0)							
7	LBA_HIGH (7:0)							
8	DEVICE							
9	COMMAND							
10	Reserved							
11	CONTROL (see 6.5)							

12.2.4 describes the mapping between the fields in the ATA PASS-THROUGH (12) CDB to corresponding ATA command fields (see ATA8-ACS).

If the SATL receives an ATA PASS-THROUGH (12) command, then the SATL shall check the PROTOCOL field (see table 101) to determine the type of action requested.

Table 101 — PROTOCOL field

Code	Description
0	ATA hardware reset
1	SRST
2	Reserved
3	Non-data
4	PIO Data-In
5	PIO Data-Out
6	DMA
7	DMA Queued
8	Device Diagnostic
9	DEVICE RESET
10	UDMA Data In
11	UDMA Data Out
12	FPDMA[a]
13, 14	Reserved
15	Return Response Information

[a] See SATA-2.6.

Page: 140

Number: 1 Author: Kevin_Marks Subject: Highlight Date: 8/27/2008 3:56:56 PM -07'00'
Code

Are these decimal or hex. Assuming hex, fix and add h to them.

Status
moverby Accepted 11/3/2008 10:24:31 PM

Number: 2 Author: HPQ-RElliott Subject: Highlight Date: 9/3/2008 9:42:24 AM -07'00'
ATA hardware reset
s/b
Device Management - ATA hardware reset

to match terminology in ata8-aam-r3

Status
moverby Accepted 11/3/2008 10:24:44 PM

Number: 3 Author: HPQ-RElliott Subject: Highlight Date: 9/3/2008 9:42:24 AM -07'00'
SRST
s/b
Device Management - ATA software reset

to match terminology in ata8-aam-r3

Status
moverby Accepted 11/3/2008 10:24:49 PM

Number: 4 Author: HPQ-RElliott Subject: Note Date: 9/3/2008 9:42:24 AM -07'00'
ata8-acs-r6 and ata8-aam-r3 add the word "Command" to the end of:
PIO Data-In
PIO Data-Out
DMA
DMA Queued
Non-data

Status
moverby Rejected 11/4/2008 11:23:51 AM

Author: moverby Subject: Sticky Note Date: 11/3/2008 10:25:26 PM
Disagree. These are protocols, not commands. (Granted commands use protocols, but not all entries in this list match)

Author: moverby Subject: Sticky Note Date: 11/4/2008 11:24:05 AM
Discussed at Nov WG meeting with consensus.

Number: 5 Author: HPQ-RElliott Subject: Highlight Date: 9/3/2008 9:42:24 AM -07'00'
Non-data
s/b
Non-Data

to match capitalization in ata8-acs-r6. However, ata8-aam-r3 uses "Non-data".

Status
moverby Rejected 11/3/2008 10:26:13 PM

Author: moverby Subject: Sticky Note Date: 11/3/2008 10:26:09 PM
Will match AAM. Will also suggest to T13 that ACS-2 match AAM.

Number: 6 Author: HPQ-RElliott Subject: Highlight Date: 9/3/2008 9:42:24 AM -07'00'
Device Diagnostic
s/b
Execute Device Diagnostic

to match ata8-acs-r6

Status
moverby Accepted 11/3/2008 10:29:20 PM

Number: 7 Author: HPQ-RElliott Subject: Highlight Date: 9/3/2008 9:42:24 AM -07'00'
DEVICE RESET
s/b
Device Reset

to match capitalization in ata8-acs-r6.

To match terminology in ata8-aam-r3, though, this should be
Non-data Command - DEVICE RESET

Status
moverby Accepted 11/3/2008 10:29:39 PM

Author: moverby Subject: Sticky Note Date: 11/3/2008 10:29:35 PM
Will make match AAM

Number: 8 Author: HPQ-RElliott Subject: Highlight Date: 9/3/2008 9:42:24 AM -07'00'

Comments from page 140 continued on next page

12.2.2 ATA PASS-THROUGH (12) command

Table 100 shows the CDB for the ATA PASS-THROUGH (12) command.

Table 100 — ATA PASS-THROUGH (12) command

Byte\Bit	7	6	5	4	3	2	1	0
0	OPERATION CODE (A1h)							
1	MULTIPLE_COUNT			PROTOCOL				Reserved
2	OFF_LINE		CK_COND	Reserved	T_DIR	BYTE_BLOCK	T_LENGTH	
3	FEATURES (7:0)							
4	SECTOR_COUNT (7:0)							
5	LBA_LOW (7:0)							
6	LBA_MID (7:0)							
7	LBA_HIGH (7:0)							
8	DEVICE							
9	COMMAND							
10	Reserved							
11	CONTROL (see 6.5)							

12.2.4 describes the mapping between the fields in the ATA PASS-THROUGH (12) CDB to corresponding ATA command fields (see ATA8-ACS).

If the SATL receives an ATA PASS-THROUGH (12) command, then the SATL shall check the PROTOCOL field (see table 101) to determine the type of action requested.

Table 101 — PROTOCOL field

Code	Description
0	ATA hardware reset
1	SRST
2	Reserved
3	Non-data
4	PIO Data-In
5	PIO Data-Out
6	DMA
7	DMA Queued
8	Device Diagnostic
9	DEVICE RESET
10	UDMA Data In
11	UDMA Data Out
12	FPDMA[a]
13, 14	Reserved
15	Return Response Information

[a] See SATA-2.6.

UDMA Data In
UDMA Data Out

ata8-acs-r6 and ata8-aam-r3 define no such protocols. Mark as obsolete?

Status
moverby Rejected 11/3/2008 10:30:20 PM
Author: moverby Subject: Sticky Note Date: 11/3/2008 10:30:14 PM

APT does define such a protocol. I would not mark obsolete yet.

Number: 9 Author: HPQ-RElliott Subject: Highlight Date: 9/3/2008 9:42:24 AM -07'00'

FPDMA

ata8-acs defines no such protocol; it lumps the FPDMA commands into the "DMA Queued" protocol. Mark as obsolete?

Status
moverby Rejected 9/9/2008 2:57:30 PM -07'00'
Author: moverby Subject: Sticky Note Date: 9/9/2008 2:57:26 PM -07'00'

Rejected: Was discussed and it was decided to leave this in place to give the SATL the ability to configure the host for the correct protocol without having to examine the opcode of the ATA command within ATA pass through.

The PROTOCOL field specifies the protocol to use when the ATA device executes the command. ATA8-AAM defines the meaning of protocol values ranging from 0 to 11.

If the PROTOCOL field specified is in the range from 0 to 12, the SATL shall send an ATA command to the ATA device.

If the PROTOCOL field contains 15 (i.e., Return Response Information), then the SATL shall:

a) if the transport is SATA, read the current Shadow Command Block registers; or
b) if the transport is PATA, read the current Command Block registers;

and return the contents in the ATA Status Return Descriptor as defined in 12.2.6. The SATL shall ignore all other fields in the CDB.

If the value in the PROTOCOL field is inappropriate for the command specified in the COMMAND field (see ATA8-ACS), then the SATL may lose communication with the ATA device. This standard does not specify the SATL behavior if this occurs.

If the ~~value in the~~ PROTOCOL field is set to zero (i.e., ATA Hardware Reset) and the device is a PATA device, then the SATL shall assert RST- (see ATA8-APT). If the ~~value in the~~ PROTOCOL field is set to zero (i.e., ATA Hardware Reset) and the device is a SATA device, then the SATL shall send a COMRESET to the SATA device. When this protocol is selected, only the PROTOCOL field and the OFF_LINE field are valid. The SATL shall ignore all other fields in the CDB.

If the PROTOCOL field is set to one, then the SATL shall send a software reset to the ATA device (see ATA8-AAM). When this protocol is selected, only the PROTOCOL field and the OFF_LINE field are valid. The SATL shall ignore all other fields in the CDB.

If the value in the PROTOCOL field requests the SATL to send a command to the ATA device, then the SATL shall set the fields in the ATA command using fields in the ATA PASS-THROUGH CDB as shown in table 105.

The SATL shall determine if a data transfer is necessary and how to perform the data transfer by examining values in the MULTIPLE_COUNT field, PROTOCOL field, OFF_LINE field, T_DIR bit, BYTE_BLOCK bit, and T_LENGTH field. The SATL shall ignore the COMMAND field in the CDB except to copy the COMMAND field in the CDB to the Command field in the Register – Host to Device FIS or to the ATA Command register. If the ATA command completes with an error, then the SATL shall return the Error Output fields (see ATA8-ACS) in the ATA Return descriptor (see 12.2.6).

The SATL shall configure the ATA host and the ATA device for the PIO, DMA, and UDMA transfer rates that both the SATL and ATA device support. The SATL should set the transfer rates to the maximum supported by both the SATL and the ATA device. ~~The COMMAND field of the CDB may specify the ATA SET FEATURES command.~~ The ATA PASS-THROUGH (12) command should not be used to send an ATA SET FEATURES command that changes the PIO/DMA/UDMA or other transfer modes of the ATA device. The result of a SET FEATURES command that changes the PIO/DMA/UDMA or other transfer modes of the ATA device is outside the scope of this standard and may cause communication to be lost with the ATA device; preventing the SATL from performing any action based on the contents of the CDB.

The BYTE_BLOCK (Byte/Block) bit specifies whether the transfer length in the location specified by the T_LENGTH field specifies the number of bytes to transfer or the number of blocks to transfer. If the value in the BYTE_BLOCK bit is set to zero, then the SATL shall transfer the number of bytes specified in the location specified by the T_LENGTH field. If the value in the BYTE_BLOCK bit is set to one the SATL shall transfer the number of blocks specified in the location specified by the T_LENGTH field. The SATL shall ignore the BYTE_BLOCK bit when the T_LENGTH field is set to zero.

The CK_COND (Check Condition) bit may be used to request the SATL to return a copy of ATA register information in the sense data upon command completion. If the CK_COND bit is set to one the SATL shall return a status of CHECK CONDITION when the ATA command completes, even if the command completes successfully, and return the ATA Normal Output fields (see ATA8-ACS) in the sense data using the ATA Return descriptor (see 12.2.6). If the CK_COND bit is set to zero, then the SATL shall terminate the command with CHECK CONDITION status only if an error occurs in processing the command. See clause 11 for a description of ATA error conditions.

Page: 141

Number: 1 Author: moverby Subject: Highlight Date: 9/8/2008 11:12:21 PM -07'00'

This is not entirely correct. AAM does not define an SRST protocol. It defines a device management protocol under which SRST falls.

Status
moverby Accepted 9/9/2008 3:01:08 PM -07'00'

Author: moverby Subject: Sticky Note Date: 9/9/2008 3:01:03 PM -07'00'

Delete sentence

Status
moverby None 9/9/2008 3:01:13 PM -07'00'

Number: 2 Author: LSI-Penokie Subject: Highlight Date: 8/20/2008 2:56:47 PM -07'00'

This should be << device processes the command >>

Status
moverby Accepted 11/3/2008 10:30:27 PM

Number: 3 Author: Kevin_Marks Subject: Highlight Date: 8/27/2008 3:56:33 PM -07'00'

0 to 11.
Make hex values

Status
moverby Accepted 11/3/2008 10:30:32 PM

Number: 4 Author: moverby Subject: Highlight Date: 9/8/2008 11:09:39 PM -07'00'

The SATL doesn't actually send a command, it just transmits the command block registers as specified in the CDB and then transfers data, if any, according to the specified command protocol.

Status
moverby Accepted 9/9/2008 3:04:13 PM -07'00'

Author: moverby Subject: Sticky Note Date: 9/9/2008 3:04:10 PM -07'00'

...the SATL shall send the ATA command specified by the pass-through CDB to the ATA device.

Number: 5 Author: Kevin_Marks Subject: Highlight Date: 8/27/2008 3:56:45 PM -07'00'

3 to 12

make hex values

Status
moverby Accepted 11/3/2008 10:36:16 PM

Number: 6 Author: LSI-Penokie Subject: Highlight Date: 8/20/2008 2:58:30 PM -07'00'

This should be << If the PROTOCOL field contains 15 (i.e., Return Response Information) and return the contents in the ATA Status Return Descriptor as defined in 12.2.6, then the SATL shall:
a) if the transport is SATA, read the current Shadow Command Block registers; or
b) if the transport is PATA, read the current Command Block registers. >>

Status
moverby Accepted 11/3/2008 10:36:33 PM

Number: 7 Author: moverby Subject: Highlight Date: 9/9/2008 3:09:26 PM -07'00'

This paragraph is a mix of an unordered list and what is actually an ordered list. It should be:

If the protocol field contains 15 (i.e., Return Response Information), then the SATL shall:
1) Ignore all fields except the protocol field;
2) Read the ATA Command Block as follows:
  a) If the transport is SATA...;
  b) If the transport is PATA...;
3) Return the contents of the command block registers as defined in 12.2.6.

Status
moverby Accepted 9/9/2008 3:09:57 PM -07'00'

Number: 8 Author: Kevin_Marks Subject: Highlight Date: 8/27/2008 3:57:10 PM -07'00'

15

make hex value

Status
moverby Accepted 11/3/2008 10:36:20 PM

Number: 9 Author: HPQ-RElliott Subject: Highlight Date: 9/3/2008 9:42:24 AM -07'00'

ATA Status Return Descriptor

Status
moverby Accepted 11/3/2008 10:36:41 PM

Number: 10 Author: HPQ-RElliott Subject: Cross-Out Date: 9/3/2008 9:42:24 AM -07'00'

Delete
value in the

Status
moverby Accepted 11/3/2008 10:36:48 PM

Number: 11 Author: Kevin_Marks Subject: Highlight Date: 8/27/2008 3:59:32 PM -07'00'

zero
s/b

0h

assuming they are hex values

Status
moverby Accepted 11/3/2008 10:36:54 PM

Number: 12 Author: HPQ-RElliott Subject: Cross-Out Date: 9/3/2008 9:42:24 AM -07'00'

Comments from page 141 continued on next page

The PROTOCOL field specifies the protocol to use when the ATA device executes the command. ATA8-AAM defines the meaning of protocol values ranging from 0 to 11.

If the PROTOCOL field specified is in the range from 3 to 12, the SATL shall send an ATA command to the ATA device.

If the PROTOCOL field contains 15 (i.e., Return Response Information), then the SATL shall:

a) if the transport is SATA, read the current Shadow Command Block registers; or
b) if the transport is PATA, read the current Command Block registers;

and return the contents in the ATA Status Return Descriptor as defined in 12.2.6. The SATL shall ignore all other fields in the CDB.

If the value in the PROTOCOL field is inappropriate for the command specified in the COMMAND field (see ATA8-ACS), then the SATL may lose communication with the ATA device. This standard does not specify the SATL behavior if this occurs.

If the ~~value in the~~ PROTOCOL field is set to zero (i.e., ATA Hardware Reset) and the device is a PATA device, then the SATL shall assert RST- (see ATA8-APT). If the ~~value in the~~ PROTOCOL field is set to zero (i.e., ATA Hardware Reset) and the device is a SATA device, then the SATL shall send a COMRESET to the SATA device. When this protocol is selected, only the PROTOCOL field and the OFF_LINE field are valid. The SATL shall ignore all other fields in the CDB.

If the PROTOCOL field is set to one, then the SATL shall send a software reset to the ATA device (see ATA8-AAM). When this protocol is selected, only the PROTOCOL field and the OFF_LINE field are valid. The SATL shall ignore all other fields in the CDB.

If the value in the PROTOCOL field requests the SATL to send a command to the ATA device, then the SATL shall set the fields in the ATA command using fields in the ATA PASS-THROUGH CDB as shown in table 105.

The SATL shall determine if a data transfer is necessary and how to perform the data transfer by examining values in the MULTIPLE_COUNT field, PROTOCOL field, OFF_LINE field, T_DIR bit, BYTE_BLOCK bit, and T_LENGTH field. The SATL shall ignore the COMMAND field in the CDB except to copy the COMMAND field in the CDB to the Command field in the Register – Host to Device FIS or to the ATA Command register. If the ATA command completes with an error, then the SATL shall return the Error Output fields (see ATA8-ACS) in the ATA Return descriptor (see 12.2.6).

The SATL shall configure the ATA host and the ATA device for the PIO, DMA, and UDMA transfer rates that both the SATL and ATA device support. The SATL should set the transfer rates to the maximum supported by both the SATL and the ATA device. [13] ~~The COMMAND field of the CDB may specify the ATA SET FEATURES command.~~ The ATA PASS-THROUGH (12) command should not be used to send an ATA SET FEATURES command that changes the PIO/DMA/UDMA or other transfer modes of the ATA device. The result of [14] a SET FEATURES command that changes the PIO/DMA/UDMA or other transfer modes of the ATA device is outside the scope of this standard and may cause communication to be lost with the ATA device; preventing the SATL from performing any action based on the contents of the CDB.

The BYTE_BLOCK (Byte/Block) bit specifies whether the transfer length in the location specified by the T_LENGTH field specifies the number of bytes to transfer or the number of blocks to transfer. If the value in the BYTE_BLOCK bit is set to zero, then the SATL shall transfer the number of bytes specified in the location specified by the T_LENGTH field. If the value in the BYTE_BLOCK bit is set to one the SATL shall transfer the number of blocks specified in the location specified by the T_LENGTH field. The SATL shall ignore the BYTE_BLOCK bit when the T_LENGTH field is set to zero.

The CK_COND (Check Condition) bit may be used to request the SATL to return a copy of ATA register information in the sense data upon command completion. If the CK_COND bit is set to one the SATL shall return a status of CHECK CONDITION when the ATA command completes, even if the command completes successfully, and return the ATA Normal Output fields (see ATA8-ACS) in the sense data using the ATA Return descriptor (see 12.2.6). If the CK_COND bit is set to zero, then the SATL shall terminate the command with CHECK CONDITION status only if an error occurs in processing the command. See clause 11 for a description of ATA error conditions.

Delete
value in the

Status
moverby Accepted 11/3/2008 10:36:58 PM

Number: 13 Author: Kevin_Marks Subject: Cross-Out Date: 8/27/2008 4:11:59 PM -07'00'

Status
moverby Accepted 11/3/2008 10:37:18 PM

Number: 14 Author: Kevin_Marks Subject: Highlight Date: 8/27/2008 4:12:29 PM -07'00'

a SET
s/b
an ATA SET

Status
moverby Accepted 11/3/2008 10:37:29 PM

The DEVICE field specifies a value for the SATL to load into the ATA Device field. Table 102 shows the bits in the DEVICE field.

Table 102 — ATA PASS-THROUGH (12) command and ATA PASS-THROUGH (16) command DEVICE field

Bit							
7	6	5	4	3	2	1	0
Obsolete	Command Specific	Obsolete	DEV	Command Specific			

The SATL shall ignore the DEV bit in the DEVICE field of the CDB.

The SATL shall set the value of the DEV bit in the ATA device register based upon the SATL mapping of ATA devices to I_T_L nexuses.

If the PROTOCOL field specifies a PIO data transfer, the SATL shall perform a PIO type transfer. The MULTIPLE_COUNT field specifies the logarithm base 2 of the number of logical sectors an ATA host shall transfer per DRQ Data Block (e.g, if the field is set to 4, the SATL shall transfer 2^4 (i.e., 16) logical sectors of data in each DRQ Data Block). If the MULTIPLE_COUNT field is nonzero and the COMMAND field is not a READ MULTIPLE command, a READ MULTIPLE EXT command, a WRITE MULTIPLE command, a WRITE MULTIPLE EXT command, or a WRITE MULTIPLE FUA EXT command, then the SATL shall terminate the command with CHECK CONDITION status with the sense key set to ILLEGAL REQUEST and the additional sense code set to INVALID FIELD IN CDB.

The OFF_LINE field specifies the time period during which the ATA Status register and the ATA Alternate Status register may be invalid after command acceptance. In a SATL with a PATA device attached, some commands may cause the PATA device to place the ATA bus in an indeterminate state. This may cause the ATA host to see command completion before the command is completed. When the application client sends a command that is capable of placing the bus in an indeterminate state, it shall set the OFF_LINE field to a value that specifies the maximum number of seconds from the time a command is sent until the ATA Status register is valid. The SATL shall not use the ATA Status register or ATA Alternate Status register to determine ATA command completion status until this time has elapsed. The valid status is available (2^{off_line+1} - 2) seconds (i.e., 0, 2, 6, and 14 seconds) after the command register is stored.

NOTE 13 - If the application client specifies an off_line value that is too small, the results are indeterminate and may compromise the integrity of the data.

If the Transfer Direction (T_DIR) bit and the direction of the data transfer specified in the PROTOCOL field do not match, the SATL shall terminate the command with CHECK CONDITION status with the sense key set to ILLEGAL REQUEST and the additional sense code set to INVALID FIELD IN CDB.

If the T_DIR bit is set to zero, then the SATL shall transfer data from the application client to the ATA device. If the T_DIR bit is set to one, then the SATL shall transfer data from the ATA device to the application client. The SATL shall ignore the T_DIR bit if the T_LENGTH field is set to zero.

The Transfer Length (T_LENGTH) field specifies where in the CDB the SATL shall locate the transfer length for the command (see table 103).

Table 103 — T_LENGTH field

Code	Description
00b	No data is transferred
01b	The transfer length is an unsigned integer specified in the FEATURES (7:0) field.
10b	The transfer length is an unsigned integer specified in the SECTOR_COUNT (7:0) field.
11b	The transfer length is an unsigned integer specified in the TPSIU (see 3.1.93).

Page: 142

Number: 1 Author: Kevin_Marks Subject: Highlight Date: 8/27/2008 4:17:37 PM -07'00'

a READ MULTIPLE command, a READ MULTIPLE EXT command, a WRITE MULTIPLE command, a WRITE MULTIPLE EXT command, or a WRITE MULTIPLE FUA EXT command,

s/b

an ATA READ MULTIPLE command, an ATA READ MULTIPLE EXT command, an ATA WRITE MULTIPLE command, an ATA WRITE MULTIPLE EXT command or an ATA WRITE MULTIPLE FUA EXT command,

Status

moverby Accepted 11/3/2008 10:37:42 PM

Number: 2 Author: moverby Subject: Highlight Date: 9/8/2008 11:07:08 PM -07'00'

The TPSIU is defined, but there is no mention of what a TPSIU really is or how it relates to this, or how a SATL receives a TPSIU.

Status

moverby Rejected 9/9/2008 3:16:25 PM -07'00'

12.2.4 describes the mapping from the FEATURES (7:0) field, the SECTOR_COUNT (7:0) field, the LBA_LOW (7:0) field, the LBA_MID (7:0) field, the LBA_HIGH (7:0) field, the DEVICE field, and the COMMAND field in the ATA PASS-THROUGH (12) CDB to corresponding ATA command fields (see ATA8-ACS).

12.2.3 ATA PASS-THROUGH (16) command

Table 104 shows format of the ATA PASS-THROUGH (16) command.

If the EXTEND bit is set to zero, then the FEATURES (15:8) field, the SECTOR_COUNT (15:8) field, the LBA_LOW (15:8) field, the LBA_MID (15:8) field, and the LBA_HIGH (15:8) field shall be ignored by the SATL, and the SATL shall process this command as specified in 12.2.2.

If the EXTEND bit is set to one, then the FEATURES (15:8) field, the SECTOR_COUNT (15:8) field, the LBA_LOW (15:8) field, the LBA_MID (15:8) field, and the LBA_HIGH (15:8) field are valid, and the SATL shall process this command as specified in 12.2.2 except as described in the remainder of this subclause.

Table 104 — ATA PASS-THROUGH (16) command

Byte\Bit	7	6	5	4	3	2	1	0
0	OPERATION CODE (85h)							
1	MULTIPLE_COUNT			PROTOCOL				EXTEND
2	OFF_LINE		CK_COND	Reserved	T_DIR	BYTE_BLOCK	T_LENGTH	
3	FEATURES (15:8)							
4	FEATURES (7:0)							
5	SECTOR_COUNT (15:8)							
6	SECTOR_COUNT (7:0)							
7	LBA_LOW (15:8)							
8	LBA_LOW (7:0)							
9	LBA_MID (15:8)							
10	LBA_MID (7:0)							
11	LBA_HIGH (15:8)							
12	LBA_HIGH (7:0)							
13	DEVICE							
14	COMMAND							
15	CONTROL (see 6.5)							

If the EXTEND bit is set to one and the value in the PROTOCOL field requests the SATL to send an ATA command to the device, then the SATL shall send a 48 bit ATA command to the ATA device.

12.2.4 describes the mapping from the FEATURES (15:8) field, the FEATURES (7:0) field, the SECTOR_COUNT (15:8) field, the SECTOR_COUNT (7:0) field, the LBA_LOW (15:8) field, the LBA_LOW (7:0) field, the LBA_MID (15:8) field, the LBA_MID (7:0) field, the LBA_HIGH (15:8) field, the LBA_HIGH (7:0) field, the DEVICE field, and the COMMAND field in the ATA PASS-THROUGH (16) CDB to corresponding ATA command fields (see ATA8-ACS).

Page: 143

Number: 1 Author: LSI-Penokie Subject: Highlight Date: 8/20/2008 3:05:08 PM -07'00'

This should be << See 12.2.4 for a description of the mapping from >>

Status
moverby Accepted 11/3/2008 10:37:53 PM

Number: 2 Author: HPQ-RElliott Subject: Highlight Date: 9/3/2008 9:42:24 AM -07'00'

format
s/b
the format

Status
moverby Accepted 11/3/2008 10:37:58 PM

Number: 3 Author: Kevin_Marks Subject: Highlight Date: 8/27/2008 4:22:20 PM -07'00'

If the EXTEND bit is set to zero, then the FEATURES (15:8) field, the SECTOR_COUNT (15:8) field, the LBA_LOW (15:8) field, the LBA_MID (15:8) field, and the LBA_HIGH (15:8) field shall be ignored by the SATL, and the SATL shall process this command as specified in 12.2.2.

If the EXTEND bit is set to one, then the FEATURES (15:8) field, the SECTOR_COUNT (15:8) field, the LBA_LOW (15:8) field, the LBA_MID (15:8) field, and the LBA_HIGH (15:8) field are valid, and the SATL shall process this command as specified in 12.2.2 except as described in the remainder of this subclause.

These should be moved to after Table 104

Status
moverby Accepted 11/3/2008 10:38:09 PM

Number: 4 Author: LSI-Penokie Subject: Highlight Date: 8/20/2008 3:06:14 PM -07'00'

This should be << See 12.2.4 for a description of the mapping >>

Status
moverby Accepted 11/3/2008 10:38:16 PM

12.2.4 Mapping of ATA PASS-THROUGH CDB field translations

Table 105 shows the mapping between the fields in the ATA PASS-THROUGH (12) CDB and the the ATA PASS-THROUGH (16) CDB to corresponding ATA command fields (see ATA8-ACS).

Table 105 — Mapping of ATA PASS-THROUGH (16) CDB fields to ATA command fields

CDB field	48-bit ATA command field[a]	28-bit ATA command field[b]
FEATURES (15:8)	Features (15:8)	n/a
FEATURES (7:0)	Features (7:0)	Features (7:0)
SECTOR_COUNT (15:8)	Count (15:8)	n/a
SECTOR_COUNT (7:0)	Count (7:0)	Count (7:0)
LBA_LOW (15:8)	LBA (31:24)	n/a
LBA_LOW (7:0)	LBA (7:0)	LBA (7:0)
LBA_MID (15:8)	LBA (39:32)	n/a
LBA_MID (7:0)	LBA (15:8)	LBA (15:8)
LBA_HIGH (15:8)	LBA (47:40)	n/a
LBA_HIGH (7:0)	LBA (23:16)	LBA (23:16)
DEVICE (7:4)	Device (7:4)	Device (7:4)
DEVICE (3:0)	Device (3:0)	LBA (27:24)
COMMAND	Command	Command

[a] The 48-bit ATA command translation applies only to the ATA PASS-THROUGH (16) command, and not to the ATA PASS-THROUGH (12) command.
[b] The 28-bit ATA command translation may apply to either the ATA PASS-THROUGH (12) command or the ATA PASS-THROUGH (16) command.

1 See 12.2.2 for a description of the MULTIPLE_COUNT field, the PROTOCOL field, the OFF_LINE field, the CK_COND bit, the T_DIR bit, and the BYTE_BLOCK bit.

The SATL shall determine the transfer length by the method specified in the T_LENGTH field (see table 106).

Table 106 — EXTEND bit and T_LENGTH field

EXTEND	T_LENGTH	Description
0	00b	No data is transferred.
	01b	The transfer length is an unsigned integer specified in the FEATURES (7:0) field.
	10b	The transfer length is an unsigned integer specified in the SECTOR_COUNT (7:0) field.
	11b	The transfer length is an unsigned integer specified in the TPSIU (see 3.1.93).
1	00b	No data is transferred.
	01b	The transfer length is an unsigned integer specified in the FEATURES (7:0) field and the FEATURES (15:8) field.
	10b	The transfer length is an unsigned integer specified in the SECTOR_COUNT (7:0) field and the SECTOR_COUNT (15:8) field.
	11b	The transfer length is an unsigned integer specified in the TPSIU (see 3.1.93) STPSIU field.

Page: 144

Number: 1 Author: Kevin_Marks Subject: Highlight Date: 8/27/2008 4:30:09 PM -07'00'

See 12.2.2 for a description of the MULTIPLE_COUNT field, the PROTOCOL field, the OFF_LINE field, the CK_COND bit, the T_DIR bit, and the BYTE_BLOCK bit.

The SATL shall determine the transfer length by the method specified in the T_LENGTH field (see table 106).

This should be in the previous section 12.2.3, since it defines fields for pass thru (16)

Status
moverby Accepted 11/3/2008 10:38:59 PM

12.2.5 ATA PASS-THROUGH status return

Table 107 shows the possible results of ATA PASS-THROUGH (12) command or ATA PASS-THROUGH (16) command processing depending on the value of the CK_COND bit in the CDB, as reflected in the ERR bit and the DF bit in the ATA Status field.

Table 107 — ATA command results

CK_COND	Status field		Sense data returned
	ERR	DF	
0	0	0	No error, successful completion or command in progress. The SATL shall respond to a REQUEST SENSE command and shall return sense data with the sense key set to NO SENSE with the additional sense code set to NO ADDITIONAL SENSE INFORMATION.
1			No error, successful completion or command in progress. The SATL shall terminate the command with CHECK CONDITION status with the sense key set to RECOVERED ERROR with the additional sense code set to ATA PASS-THROUGH INFORMATION AVAILABLE (see SPC-4). The sense data shall include the ATA Status Return Descriptor (see 12.2.5)[a].
n/a	n/a	1	The ATA command completed with an error. The SATL shall terminate the command with CHECK CONDITION status with the sense key and additional sense code set as described in clause 11 and the sense data shall include the ATA Status Return Descriptor (see 12.2.6).
	1	0	

[a] This capability allows the host to retrieve the ATA register or field information with successful command completion by returning data in the ATA registers or fields.

ATA commands may return information in the ATA registers or the Shadow Command Block. The current ATA register information may be retrieved by requesting the ATA Status Return Descriptor issuing the ATA PASS-THROUGH (12) command or ATA PASS-THROUGH (16) command with the PROTOCOL field set to 15 (i.e., Return Response Information).

Page: 145

Number: 1 Author: Kevin_Marks Subject: Highlight Date: 8/27/2008 4:44:14 PM -07'00'

respond to a REQUEST SENSE command and shall return sense data with
the sense key set to NO SENSE with the additional sense code set to NO
ADDITIONAL SENSE INFORMATION.
s/b
return GOOD status.

Or don't include this row

Status
moverby Accepted 9/9/2008 3:20:00 PM -07'00'

Author: moverby Subject: Sticky Note Date: 9/9/2008 3:19:57 PM -07'00'

Replace entire cell with No sense data returned as a result of status being GOOD.

Number: 2 Author: Kevin_Marks Subject: Highlight Date: 8/27/2008 4:46:12 PM -07'00'

(see 12.2.5)
s/b
(see 12.2.6)

Status
moverby Accepted 11/3/2008 10:39:31 PM

12.2.6 ATA Return descriptor

Table 108 shows the format of the ATA Return descriptor returned in the sense data (see SPC-3 and SAM-4). The SATL shall return the ATA Return descriptor if the PROTOCOL field in the ATA PASS-THROUGH (12) command or ATA PASS-THROUGH (16) command is set to 15 (i.e., Return Response Information).

The SATL shall support the ATA Return descriptor if the SATL supports the ATA PASSTHROUGH (12) command or the ATA PASS-THROUGH (16) command. Each time the ATA Return descriptor is requested, the SATL shall read the ATA registers and return those values in the sense data as shown in table 108. If the sense data is for an ATA PASS-THROUGH (12) command or for the ATA PASS-THROUGH (16) command with the EXTEND bit set to zero the SATL shall return the 28-bit extended status and shall set the EXTEND bit to zero.

If the sense data is for an ATA PASS-THROUGH (16) command with the EXTEND bit set to one the SATL shall return the 48-bit extended status and shall set the EXTEND bit to one.

Table 108 — ATA Return descriptor

Byte\Bit	7	6	5	4	3	2	1	0
0	DESCRIPTOR CODE (09h)							
1	ADDITIONAL DESCRIPTOR LENGTH (0Ch)							
2	Reserved							EXTEND
3	ERROR							
4	SECTOR_COUNT (15:8)							
5	SECTOR_COUNT (7:0)							
6	LBA_LOW (15:8)							
7	LBA_LOW (7:0)							
8	LBA_MID (15:8)							
9	LBA_MID (7:0)							
10	LBA_HIGH (15:8)							
11	LBA_HIGH (7:0)							
12	DEVICE							
13	STATUS							

If the EXTEND bit is set to one, then the SECTOR_COUNT (7:0) field and SECTOR_COUNT (15:8) field specify the ATA Sector Count. If the EXTEND bit is set to zero, then the SECTOR_COUNT (7:0) field specifies the ATA Sector Count and SECTOR_COUNT (15:8) field shall be ignored.

If the EXTEND bit is set to one, then the LBA_LOW (7:0) field, LBA_MID (7:0) field, LBA_HIGH (7:0) field, LBA_LOW (15:8) field, LBA_MID (15:8) field, and LBA_HIGH (15:8) field specify the ATA LBA. If the EXTEND bit is set to zero, then the LBA_LOW (7:0) field, LBA_MID (7:0) field, and LBA_HIGH (7:0) field specify the ATA LBA, and the LBA_LOW (15:8) field, LBA_MID (15:8) field, and LBA_HIGH (15:8) field shall be ignored.

Page: 146

Number: 1 Author: HPQ-RElliott Subject: Highlight Date: 9/3/2008 9:42:24 AM -07'00'

PASSTHROUGH

s/b

PASS-THROUGH

Status

moverby Accepted 11/3/2008 10:39:39 PM

Number: 2 Author: HPQ-RElliott Subject: Highlight Date: 9/3/2008 9:42:24 AM -07'00'

;

s/b

,

Status

moverby Accepted 11/3/2008 10:39:52 PM

Number: 3 Author: Kevin_Marks Subject: Highlight Date: 8/27/2008 7:22:21 PM -07'00'

SECTOR_COUNT (15:8) field shall be ignored.

Who shall ignore this? Are you telling the app client to ignore?

I would say shall be set to zero.

Status

moverby Accepted 9/9/2008 3:28:09 PM -07'00'

Author: moverby Subject: Sticky Note Date: 9/9/2008 3:28:06 PM -07'00'

... (15:8) field should be ignored.

Number: 4 Author: Kevin_Marks Subject: Highlight Date: 8/27/2008 7:22:31 PM -07'00'

LBA_LOW (15:8) field, LBA_MID (15:8) field, and LBA_HIGH (15:8) field shall be ignored

Who shall ignore this? Are you telling the app client to ignore?

I would say shall be set to zero.

Status

moverby Accepted 11/3/2008 10:40:43 PM

Author: moverby Subject: Sticky Note Date: 11/3/2008 10:40:40 PM

Agreed. Should be shall be set to zero

12.3 SAT-specific mode pages

12.3.1 SAT-specific mode pages overview

This subclause describes mode pages that the SATL may implement that are unique to the SCSI / ATA Translation standard. These mode pages are for use by the SATL, are shown in table 109[1], and are described in this subclause.

[3]~~Support for these mode pages is optional.~~ [4]~~A SATL shall support the appropriate mode page for the attached ATA environment (e.g., PATA).~~

Table 109 — SCSI / ATA Translation specific mode pages

PAGE CODE	~~SUB PAGE~~ [5]CODE	Mode page name
0Ah	F1h	PATA Control [6]~~Mode Page~~
[7]~~0Ah~~	~~F2h~~	~~Reserved~~
1Ah	F1h	ATA Power Condition [8]~~Mode Page~~

12.3.2 PATA Control mode page

The PATA Control mode page provides PATA specific controls for a SATL to configure the underlying PATA host and to understand what parameters are communicated to the PATA device to ensure proper communication for specific transfer rates. This standard specifies the mode parameters that are provided for this mode page.

SATL implementations that support the attachment of PATA devices shall support this mode page. The SATL should allow application clients to configure alternate PATA timings using the MODE SELECT command.

Table 110 shows the PATA Control mode page.

Table 110 — PATA Control mode page

Byte\Bit	7	6	5	4	3	2	1	0
0	PS	SPF (1b)	PAGE CODE (0Ah)					
1	SUBPAGE CODE (F1h)							
2	(MSB)	PAGE LENGTH (0004h)						
3								(LSB)
4	Reserved	MWDMA[a] bits			Reserved		PIO[b] bits	
		MWD2	MWD1	MWD0			PIO4	PIO3
5	Reserved	UDMA[c] bits						
		UDMA6	UDMA5	UDMA4	UDMA3	UDMA2	UDMA1	UDMA0
6	Reserved							
7								

[a] The Multi-Word Direct Memory Access (MWDMA) bits specify a number of hardware-assisted data transfer modes defined in ATA8-APT.
[b] PIO stands for Programmed Input and Output and the PIOx bits specify transfer modes performed under program control defined in ATA8-APT.
[c] The Ultra Direct Memory Access (UDMA) bits represent a number of hardware-assisted data transfer modes defined in ATA8-APT.

The parameters saveable (PS) bit is defined in [9]SPC-3.

[10]~~The SPF bit (see SPC-3) shall be set to~~ [11]~~one to access this mode page.~~

Page: 147

Number: 1 Author: Kevin_Marks Subject: Cross-Out Date: 8/27/2008 7:23:17 PM -07'00'

Status
moverby Accepted 11/3/2008 10:40:51 PM

Number: 2 Author: Kevin_Marks Subject: Cross-Out Date: 8/27/2008 7:23:50 PM -07'00'

Stated above already with the "may"

Status
moverby Accepted 11/3/2008 10:40:55 PM

Number: 3 Author: moverby Subject: Cross-Out Date: 9/9/2008 3:33:34 PM -07'00'

Status
moverby Accepted 9/9/2008 3:33:43 PM -07'00'

Number: 4 Author: Kevin_Marks Subject: Highlight Date: 8/27/2008 7:26:00 PM -07'00'

A SATL shall support the appropriate mode page for the attached ATA environment (e.g., PATA).

What does this mean? You have a may support, the saying their optional, then saying shall for ATA environment with an example of PATA? Is the PATA Control Mode page mandatory if supporting PATA drives?

Status
moverby Accepted 9/9/2008 3:35:19 PM -07'00'

Author: moverby Subject: Sticky Note Date: 9/9/2008 3:35:17 PM -07'00'

Add table footnote to PATA control mode page noting the requirement for PATA host controllers

Number: 5 Author: moverby Subject: Replacement Text Date: 9/9/2008 3:31:06 PM -07'00'

subpage

Status
moverby Accepted 11/3/2008 10:41:05 PM

Number: 6 Author: Kevin_Marks Subject: Cross-Out Date: 8/27/2008 7:29:19 PM -07'00'

Status
moverby Accepted 11/3/2008 10:41:40 PM

Number: 7 Author: Kevin_Marks Subject: Cross-Out Date: 8/27/2008 7:30:58 PM -07'00'

Why is this specifically Reserved? Or did you mean subcodes F2 thru FE are reserved?

Status
moverby Accepted 9/9/2008 3:33:55 PM -07'00'

Number: 8 Author: Kevin_Marks Subject: Cross-Out Date: 8/27/2008 7:29:20 PM -07'00'

Status
moverby Accepted 11/3/2008 10:41:45 PM

Number: 9 Author: Kevin_Marks Subject: Highlight Date: 8/27/2008 7:34:19 PM -07'00'

SPC-3.
s/b
SPC-4.

Status
moverby Accepted 11/3/2008 10:42:05 PM

Number: 10 Author: Kevin_Marks Subject: Cross-Out Date: 8/27/2008 7:36:33 PM -07'00'

See next comment. Included in it.

Status
moverby Accepted 11/3/2008 10:42:43 PM

Number: 11 Author: HPQ-RElliott Subject: Highlight Date: 9/3/2008 9:42:24 AM -07'00'

one to access this mode page
s/b
the value defined in table 110

Status
moverby Rejected 11/3/2008 10:43:14 PM

Author: moverby Subject: Sticky Note Date: 11/3/2008 10:43:10 PM

Rejected in favor of Kevin Marks rewrite

The PAGE CODE field shall be set to 0Ah.

The PAGE LENGTH field shall be set to 0004h.

The SUBPAGE CODE field shall be set to 01h.

SATL implementations may save the state of the timing parameters defined in this mode page.

Application clients may use the MODE SENSE command for changeable values to determine the underlying ATA host support for a given ATA timing mode. The SATL shall support changeable mode parameters for this mode page.

When processing a MODE SENSE command, the SATL shall set the PIO3 bit and PIO4 bit as shown table 111 to identify the configured PIO mode.

Table 111 — PIO modes

PIO4	PIO3	PIO mode
0	0	Reserved
0	1	The ATA host shall use PIO mode 3 transfers.
1	0	The ATA host shall use PIO mode 4 transfers.
1	1	Reserved

When changeable values are requested, the PIO3 bit and the PIO4 bit indicate if the underlying ATA host supports those transfer modes. The PIO3 bit shall be set to one if the ATA host supports PIO mode 3. The PIO3 bit and the PIO4 bit shall be set to one if the ATA host supports PIO mode 4.

If the SATL receives a MODE SELECT command and the PIO bits specify a change from the current setting, the SATL shall configure the ATA host to use the new PIO transfer rate, if supported. If the application client requests a PIO setting that the ATA device does not support, then the SATL shall terminate the command with CHECK CONDITION status with the sense key set to ILLEGAL REQUEST and the additional sense code set to INVALID FIELD IN PARAMETER LIST.

The MWD0 bit, the MWD1 bit, and the MWD2 bit are collectively referred to as the MWDMA bits. If the ATA host in the SATL is currently configured to use multiword DMA (MWDMA), then the MWDMA bits are used to determine what mode is currently being used, what modes are supported by the ATA host, and control of the MWDMA mode.

If the SATL receives a MODE SENSE command requesting the current values of the PATA Control mode page, the MWD0 bit shall be set to one by the SATL when the host and device are configured to use MWDMA mode 0. The MWD1 bit shall be set to one by the SATL when the host and device are configured to use MWDMA mode1. The MWD2 bit shall be set to one by the SATL when the host and device are configured to use MWDMA mode 2.

If the SATL receives a MODE SENSE command requesting the changeable values of the PATA Control mode page, the MWD0 bit shall be set to one if the ATA host supports MWDMA mode 0. The MWD1 bit and MWD0 bit shall each be set to one if the ATA host supports MWDMA mode 1. The MWD2 bit, the MWD1 bit, and the MWD0 bit shall be each be set to one if the ATA host supports MWDMA mode 2.

Page: 148

Number: 1 Author: Kevin_Marks Subject: Highlight Date: 8/27/2008 7:38:19 PM -07'00'

The SPF bit (see SPC-3) shall be set to one to access this mode page.
The PAGE CODE field shall be set to 0Ah.
The PAGE LENGTH field shall be set to 0004h.
The SUBPAGE CODE field shall be set to F1h.

These are already stated in table 110.

s/b

The SPF bit, PAGE CODE field, PAGE LENGTH field and SUBPAGE CODE field shall be set as shown in table 110.

Status
moverby Accepted 11/3/2008 10:42:35 PM

Number: 2 Author: HPQ-RElliott Subject: Highlight Date: 9/3/2008 9:42:24 AM -07'00'

0Ah
s/b
the value defined in table 110

Status
moverby Rejected 11/3/2008 10:43:42 PM
Author: moverby Subject: Sticky Note Date: 11/3/2008 10:43:38 PM
Rejected in favor of Kevin Marks rewrite

Number: 3 Author: HPQ-RElliott Subject: Highlight Date: 9/3/2008 9:42:24 AM -07'00'

0004h
s/b
the value defined in table 110

Status
moverby Rejected 11/3/2008 10:43:51 PM
Author: moverby Subject: Sticky Note Date: 11/3/2008 10:43:47 PM
Rejected in favor of Kevin Marks rewrite

Number: 4 Author: HPQ-RElliott Subject: Highlight Date: 9/3/2008 9:42:24 AM -07'00'

F1h
s/b
the value defined in table 110

Status
moverby Rejected 11/3/2008 10:44:02 PM
Author: moverby Subject: Sticky Note Date: 11/3/2008 10:43:58 PM
Rejected in favor of Kevin Marks rewrite

Number: 5 Author: HPQ-RElliott Subject: Highlight Date: 9/3/2008 9:42:24 AM -07'00'

shown
s/b
shown in

Status
moverby Accepted 11/3/2008 10:44:06 PM

Number: 6 Author: HPQ-RElliott Subject: Note Date: 9/3/2008 9:42:24 AM -07'00'

Delete whitespace below table 111

Status
moverby Accepted 11/3/2008 10:44:11 PM

Table 112 specifies values set by the SATL in the MWD0 bit, the MWD1 bit, and the MWD2 bit for current and changeable MWDMA settings.

Table 112 — MWDMA modes reported by MODE SENSE

MWDMA[a] bits			ATA host and device shared configuration settings returned as current values	ATA host support returned as changeable values
MWD2	MWD1	MWD0		
0	0	0	Configured not to use multiword DMA	Illegal combination
1	0	0	Configured to use MWDMA mode 1	
0	1	0	Configured to use MWDMA mode 2	
1	1	0	Configured to use MWDMA modes 1 and 2	
0	0	1	Configured to use MWDMA mode 0	MWDMA mode 0 supported
1	0	1	Configured to use MWDMA modes 0 and 2	Illegal combination
0	1	1	Configured to use MWDMA modes 0 and 1	MWDMA mode 1 supported
1	1	1	Configured to use MWDMA modes 0, 1 and 2	MWDMA mode 2 supported

[a] If the application client attempts to set a MWDMA mode that is not supported by the ATA host environment, the SATL shall return a CHECK CONDITION status with the sense key set to ILLEGAL REQUEST with the additional sense code set to INVALID FIELD IN PARAMETER LIST.

If the SATL receives a MODE SELECT command and the MWDMA bits specify a change from the current settings, then the SATL shall send an ATA SET FEATURES - Set Transfer Mode (i.e., Features register set to 03h) command to the ATA device to set the MWDMA mode on the ATA device to the requreseted state, and then:

a) if the ATA SET FEATURES command completes with an error, then the SATL shall:
1) not change any host transfer modes;
2) complete the MODE SELECT command with a CHECK CONDITION status with the sense key set to ABORTED COMMAND with the additional sense code set to ATA DEVICE FAILED SET FEATURES; ~~and~~
~~3) take no further action regarding this request to change the MWDMA transfer rate;~~

or

b) if the SET FEATURES command completes without error, then the SATL shall:
1) configure the ATA host to communicate with the device at the requested MWDMA transfer rate; and
2) complete the MODE SELECT command with GOOD status.

The MWDMA bits values used to configure ATA hosts and ATA devices using the MODE SELECT command have the same meaning as the MWDMA bits values returned by the MODE SENSE command when current values are requested as shown in table 112.

If the SATL receives a request to set a MWDMA mode that is not supported by the ATA host or the attached PATA device, the SATL shall return a CHECK CONDITION status with the sense key set to ILLEGAL REQUEST with the additional sense code set to INVALID FIELD IN PARAMETER LIST.

The UDMA0 bit, the UDMA1 bit, the UDMA2 bit, the UDMA3 bit, the UDMA4 bit, the UDMA5 bit, and the UDMA6 bit are collectively referred to as the UDMA bits, and are used to determine support for, current use of, and control of Ultra DMA (UDMA) transfer rates on the ATA host and device. The SATL shall determine the highest UDMA mode supported as being the lower of the ATA host maximum transfer mode and the device maximum transfer mode.

NOTE 14 - The ATA device returns the UDMA transfer mode specified in ATA IDENTIFY DEVICE data, word 88 bits 6:0 (see ATA8-ACS).

Page: 149

Number: 1 Author: HPQ-RElliott Subject: Highlight Date: 9/3/2008 9:42:24 AM -07'00'

Trnasfer
s/b
Transfer

Status
moverby Accepted 10/20/2008 1:16:41 PM -07'00'

Number: 2 Author: Kevin_Marks Subject: Highlight Date: 8/27/2008 8:08:34 PM -07'00'

Trnasfer
s/b
transfer

Status
moverby Accepted 10/20/2008 1:16:38 PM -07'00'

Number: 3 Author: Kevin_Marks Subject: Highlight Date: 8/27/2008 8:08:43 PM -07'00'

Mode
s/b
mode

Status
moverby Accepted 11/3/2008 10:45:36 PM

Number: 4 Author: moverby Subject: Replacement Text Date: 11/3/2008 10:45:32 PM

transfer

Status
moverby Accepted 11/3/2008 10:45:41 PM

Number: 5 Author: Kevin_Marks Subject: Highlight Date: 8/27/2008 7:58:24 PM -07'00'

requreseted
s/b
requested

Status
moverby Accepted 10/20/2008 1:16:44 PM -07'00'

Number: 6 Author: Kevin_Marks Subject: Highlight Date: 8/27/2008 7:44:15 PM -07'00'

modes;
s/b
modes; and

Status
moverby Accepted 10/20/2008 1:17:18 PM -07'00'

Number: 7 Author: Kevin_Marks Subject: Sticky Note Date: 8/27/2008 7:42:50 PM -07'00'

Need to indent 1),2),3) list on a) and b)

Status
moverby Accepted 10/20/2008 1:16:59 PM -07'00'

Number: 8 Author: LSI-Penokie Subject: Sticky Note Date: 8/20/2008 3:13:46 PM -07'00'

The 1,2,3 list needs to be indented.

Status
moverby Accepted 10/20/2008 1:16:54 PM -07'00'

Number: 9 Author: Kevin_Marks Subject: Cross-Out Date: 8/27/2008 7:43:56 PM -07'00'

Status
moverby Accepted 10/20/2008 1:17:25 PM -07'00'

Number: 10 Author: Kevin_Marks Subject: Cross-Out Date: 8/27/2008 7:43:46 PM -07'00'

Command is complete with check condition.

Status
moverby Accepted 10/20/2008 1:17:13 PM -07'00'

Number: 11 Author: Kevin_Marks Subject: Highlight Date: 8/27/2008 7:44:32 PM -07'00'

SET FEATURES
s/b
ATA SET FEATURES

Status
moverby Accepted 10/20/2008 1:17:38 PM -07'00'

Number: 12 Author: LSI-Penokie Subject: Sticky Note Date: 8/20/2008 3:14:02 PM -07'00'

The 1,2 list needs to be indented.

Status
moverby Accepted 10/20/2008 1:17:30 PM -07'00'

If the SATL receives a MODE SENSE command requesting the changeable values of the PATA Control mode page, the UDMA bits shall be set according to table 113.

Table 113 — UDMA bits requirements for changeable MODE SENSE parameters

UDMA6	UDMA5	UDMA4	UDMA3	UDMA2	UDMA1	UDMA0	Highest UDMA mode supported
0	0	0	0	0	0	0	UDMA Unsupported
0	0	0	0	0	0	1	0
0	0	0	0	0	1	1	1
0	0	0	0	1	1	1	2
0	0	0	1	1	1	1	3
0	0	1	1	1	1	1	4
0	1	1	1	1	1	1	5
1	1	1	1	1	1	1	6

If the SATL receives a MODE SENSE command requesting the current values of the PATA Control mode page, then the SATL shall set the UDMA bits as defined in table 114. Only one of the UDMA bits shall be set to one at any time for such a request. If UDMA is not the current DMA transfer mode, then all the UDMA bits shall be set to zero. If a UDMA transfer mode is being used, then all of the MWDMA bits shall be set to zero.

Table 114 — UDMA for current MODE SENSE settings

UDMA bit[1]	Value	Description
udma0	0	ATA host and device are not communicating using UDMA Mode 0
	1	ATA host and device are communicating using UDMA Mode 0
udma1	0	ATA host and device are not communicating using UDMA Mode 1
	1	ATA host and device are communicating using UDMA Mode 1
udma2	0	ATA host and device are not communicating using UDMA Mode 2
	1	ATA host and device are communicating using UDMA Mode 2
udma3	0	ATA host and device are not communicating using UDMA Mode 3
	1	ATA host and device are communicating using UDMA Mode 3
udma4	0	ATA host and device are not communicating using UDMA Mode 4
	1	ATA host and device are communicating using UDMA Mode 4
udma5	0	ATA host and device are not communicating using UDMA Mode 5
	1	ATA host and device are communicating using UDMA Mode 5
udma6	0	ATA host and device are not communicating using UDMA Mode 6
	1	ATA host and device are communicating using UDMA Mode 6

Page: 150

Number: 1 Author: Kevin_Marks Subject: Highlight Date: 8/27/2008 7:46:52 PM -07'00'

UDMA bit

Why are the udmax's below not in small CAPS?

Status

moverby Accepted 9/9/2008 3:35:49 PM -07'00'

When the SATL receives a MODE SELECT command and the UDMA bits request a change in the UDMA transfer rate, then the SATL shall:

1) if the SET FEATURES command completes with an error, then the SATL shall:
   A) not change any host transfer modes;
   B) complete the MODE SELECT command with a CHECK CONDITION status with the sense key set to ABORTED COMMAND with the additional sense code set to ATA DEVICE FAILED SET FEATURES; and
   C) take no further action regarding this request to change the UDMA transfer rate;

and

2) if the SET FEATURES command completes without error, then the SATL shall:
   A) configure the ATA host to communicate with the device at the requested UDMA transfer rate; and
   B) complete the MODE SELECT command with GOOD status.

If the application client attempts to set a mode that the ATA host or the ATA device does not support, then the SATL shall terminate the MODE SELECT command with CHECK CONDITION status with the sense key set to ILLEGAL REQUEST with the additional sense code set to INVALID FIELD IN PARAMETER LIST.

12.3.3 ATA Power Condition Mode Page

The ATA Power Condition Mode Page provides ATA specific controls for a SATL to configure ATA specific power management functions.

Table 115 shows the ATA Power Condition Mode Page.

Table 115 — ATA Power Condition Mode Page

Byte\Bit	7	6	5	4	3	2	1	0
0	PS	SPF (1b)	PAGE CODE (1Ah)					
1	SUBPAGE CODE (F1h)							
2	(MSB)	PAGE LENGTH (000Ch)						
3								(LSB)
4	Reserved							
5	Reserved							APMP
6	APM VALUE							
7	Reserved							
15								

See SPC-4 for the descriptions of PS, SPF, PAGE CODE, and PAGE LENGTH fields.

The SPF bit (see SPC-4) shall be set to one to access this page.

PAGE CODE shall be set to 1Ah.

SUBPAGE CODE shall be set to F1h.

When processing a MODE SELECT, if the APMP bit is set to zero, then the SATL shall ignore the APM VALUE field.

When processing a MODE SELECT, if the APMP bit is set to one, then the SATL shall alter the ATA APM mode by issuing an ATA SET FEATURES command. If the APM VALUE field contains a non-zero value, the ATA SET FEATURES – Enable/disable advanced power management (i.e., subcommand 05h) command shall be sent and the APM VALUE field shall be used to set the power management level (i.e., COUNT field). If the APM VALUE field contains a zero, then the ATA SET FEATURES – Disable advanced power management (i.e., subcommand 85h) command shall be sent.

Page: 151

Number: 1 Author: Kevin_Marks Subject: Highlight Date: 8/27/2008 8:08:59 PM -07'00'

"When the SATL receives a MODE SELECT command and the UDMA bits request a change in the UDMA transfer rate, then the SATL shall:
1) if the SET FEATURES command completes with an error, then the SATL shall:
A) not change any host transfer modes;
B) complete the MODE SELECT command with a CHECK CONDITION status with the sense key set to ABORTED COMMAND with the additional sense code set to ATA DEVICE FAILED SET FEATURES; and
C) take no further action regarding this request to change the UDMA transfer rate;
and
2) if the SET FEATURES command completes without error, then the SATL shall:
A) configure the ATA host to communicate with the device at the requested UDMA transfer rate; and
B) complete the MODE SELECT command with GOOD status."

s/b

"If the SATL receives a MODE SELECT command and the UDMA bits specify a change from the current settings, then the SATL shall send an ATA SET FEATURES - Set transfer mode (i.e., Features register set to 03h) command to the ATA device to set the UDMA mode on the ATA device to the requested state, and then:
a) if the SET FEATURES command completes with an error, then the SATL shall:
1) not change any host transfer modes; and
2) complete the MODE SELECT command with a CHECK CONDITION status with the sense key set to ABORTED COMMAND with the additional sense code set to ATA DEVICE FAILED SET FEATURES; and
or
b) if the SET FEATURES command completes without error, then the SATL shall:
1) configure the ATA host to communicate with the device at the requested UDMA transfer rate; and
2) complete the MODE SELECT command with GOOD status.
"

Status
moverby Accepted 11/4/2008 11:27:51 AM

Author: moverby Subject: Sticky Note Date: 11/3/2008 10:48:30 PM

Rejecting. It is important that step C happen otherwise the two ends of the cable could lose communication. Could replace with:
"C) Not make any changes to host controller timing modes."

Author: moverby Subject: Sticky Note Date: 11/4/2008 11:27:48 AM

Not rejecting. However, making change to C) as proposed. Also redoing to a) 1) 2) b) 1) 2).

Number: 2 Author: Kevin_Marks Subject: Highlight Date: 8/27/2008 8:01:49 PM -07'00'

Mode Page
s/b
mode page

Status
moverby Accepted 11/3/2008 10:48:35 PM

Number: 3 Author: Kevin_Marks Subject: Highlight Date: 8/27/2008 8:01:32 PM -07'00'

Mode Page
s/b
mode page

Status
moverby Accepted 11/3/2008 10:48:50 PM

Number: 4 Author: Kevin_Marks Subject: Highlight Date: 8/27/2008 8:01:56 PM -07'00'

Mode Page
s/b
mode page

Status
moverby Accepted 11/3/2008 10:48:55 PM

Number: 5 Author: HPQ-RElliott Subject: Note Date: 9/3/2008 9:42:24 AM -07'00'

Delete whitespace above table 115

Status
moverby Accepted 11/3/2008 10:49:00 PM

Number: 6 Author: Kevin_Marks Subject: Highlight Date: 8/27/2008 8:02:10 PM -07'00'

Mode Page
s/b
mode page

Status
moverby Accepted 11/3/2008 10:49:04 PM

Number: 7 Author: Kevin_Marks Subject: Highlight Date: 8/27/2008 8:03:43 PM -07'00'

The SPF bit (see SPC-4) shall be set to one to access this page.
PAGE CODE shall be set to 1Ah.
SUBPAGE CODE shall be set to F1h.

Stated in Table 115 already.

s/b

The SPF bit, PAGE CODE field and SUBPAGE CODE field shall be set to as shown in table 115.

Status
moverby Accepted 11/3/2008 10:49:23 PM

Comments from page 151 continued on next page

When the SATL receives a MODE SELECT command and the UDMA bits request a change in the UDMA transfer rate, then the SATL shall:

1) if the SET FEATURES command completes with an error, then the SATL shall:
   A) not change any host transfer modes;
   B) complete the MODE SELECT command with a CHECK CONDITION status with the sense key set to ABORTED COMMAND with the additional sense code set to ATA DEVICE FAILED SET FEATURES; and
   C) take no further action regarding this request to change the UDMA transfer rate;

and

2) if the SET FEATURES command completes without error, then the SATL shall:
   A) configure the ATA host to communicate with the device at the requested UDMA transfer rate; and
   B) complete the MODE SELECT command with GOOD status.

If the application client attempts to set a mode that the ATA host or the ATA device does not support, then the SATL shall terminate the MODE SELECT command with CHECK CONDITION status with the sense key set to ILLEGAL REQUEST with the additional sense code set to INVALID FIELD IN PARAMETER LIST.

12.3.3 ATA Power Condition Mode Page

The ATA Power Condition Mode Page provides ATA specific controls for a SATL to configure ATA specific power management functions.

Table 115 shows the ATA Power Condition Mode Page.

Table 115 — ATA Power Condition Mode Page

Byte\Bit	7	6	5	4	3	2	1	0
0	PS	SPF (1b)	PAGE CODE (1Ah)					
1	SUBPAGE CODE (F1h)							
2	(MSB)	PAGE LENGTH (000Ch)						
3								(LSB)
4	Reserved							
5	Reserved							APMP
6	APM VALUE							
7	Reserved							
15								

See SPC-4 for the descriptions of PS, SPF, PAGE CODE, and PAGE LENGTH fields.

The SPF bit (see SPC-4) shall be set to one to access this page.

PAGE CODE shall be set to 1Ah.

SUBPAGE CODE shall be set to F1h.

When processing a MODE SELECT, if the APMP bit is set to zero, then the SATL shall ignore the APM VALUE field.

When processing a MODE SELECT, if the APMP bit is set to one, then the SATL shall alter the ATA APM mode by issuing an ATA SET FEATURES command. If the APM VALUE field contains a non-zero value, the ATA SET FEATURES – Enable/disable advanced power management (i.e., subcommand 05h) command shall be sent and the APM VALUE field shall be used to set the power management level (i.e., COUNT field). If the APM VALUE field contains a zero, then the ATA SET FEATURES – Disable advanced power management (i.e., subcommand 85h) command shall be sent.

Number: 8 Author: HPQ-RElliott Subject: Highlight Date: 9/3/2008 9:42:24 AM -07'00'

one to access this page

s/b

the value defined in table 115

Status

moverby Accepted 11/3/2008 10:49:17 PM

Number: 9 Author: HPQ-RElliott Subject: Highlight Date: 9/3/2008 9:42:24 AM -07'00'

1Ah

s/b

the value defined in table 115

Status

moverby Accepted 11/3/2008 10:49:28 PM

Number: 10 Author: HPQ-RElliott Subject: Highlight Date: 9/3/2008 9:42:24 AM -07'00'

PAGE CODE

s/b

The PAGE CODE field

Status

moverby Accepted 11/3/2008 10:49:32 PM

Number: 11 Author: HPQ-RElliott Subject: Highlight Date: 9/3/2008 9:42:24 AM -07'00'

F1h

s/b

the value defined in table 115

Status

moverby Accepted 11/3/2008 10:49:36 PM

Number: 12 Author: HPQ-RElliott Subject: Highlight Date: 9/3/2008 9:42:24 AM -07'00'

SUBPAGE CODE

s/b

The SUBPAGE CODE field

Status

moverby Accepted 11/3/2008 10:49:41 PM

Number: 13 Author: Kevin_Marks Subject: Highlight Date: 8/27/2008 8:04:33 PM -07'00'

MODE SELECT, if

s/b

MODE SELECT command, if

Status

moverby Accepted 11/3/2008 10:49:47 PM

Number: 14 Author: Kevin_Marks Subject: Highlight Date: 8/27/2008 8:05:27 PM -07'00'

MODE SELECT, if

s/b

MODE SELECT command, if

Status

moverby Accepted 11/3/2008 10:49:51 PM

Number: 15 Author: Kevin_Marks Subject: Highlight Date: 8/27/2008 8:06:54 PM -07'00'

value, the

s/b

value, then the

Status

moverby Accepted 11/3/2008 10:49:55 PM

Number: 16 Author: Kevin_Marks Subject: Highlight Date: 8/27/2008 8:10:13 PM -07'00'

Enable/disable advanced power management

s/b

Enable/disable the APM feature set

Status

moverby Accepted 11/3/2008 10:50:02 PM

Number: 17 Author: Kevin_Marks Subject: Highlight Date: 8/27/2008 8:11:10 PM -07'00'

Disable advanced power management

s/b

Disable the APM feature set

Status

moverby Accepted 11/3/2008 10:50:05 PM

If the ATA SET FEATURES command completes with any error, then the SATL shall terminate the MODE SELECT with CHECK CONDITION status with the sense key set to ILLEGAL REQUEST with the additional sense code set to INVALID FIELD IN PARAMETER LIST.

When processing a MODE SENSE, the SATL shall determine if ATA APM mode is enabled by verifying that ATA IDENTIFY DEVICE data word 83, bit 3 is set to one, and that ATA IDENTIFY DEVICE data word 86, bit 3 is also set to one. If ATA APM mode is not enabled, then the APMP bit shall be set to zero. If ATA APM mode is enabled, then the APMP bit shall be set to one and the APM VALUE field shall contain the value from ATA IDENTIFY DEVICE word 91 bits (7:0).

Page: 152

Number: 1 Author: Kevin_Marks Subject: Cross-Out Date: 8/27/2008 8:11:39 PM -07'00'

Status
moverby Accepted 11/3/2008 10:50:21 PM

Number: 2 Author: Kevin_Marks Subject: Highlight Date: 8/27/2008 8:12:06 PM -07'00'

MODE SELECT with
s/b
MODE SELECT command with

Status
moverby Accepted 11/3/2008 10:50:25 PM

12.4 SAT-specific VPD pages

12.4.1 SAT-specific VPD pages overview

This subclause defines VPD pages specific to SAT implementations.

12.4.2 ATA Information VPD page

12.4.2.1 ATA Information VPD page overview

The ATA Information VPD page shall contain:

a) information about the SATL;
b) Signature of the ATA or ATAPI device; and
c) ATA IDENTIFY DEVICE data or ATA IDENTIFY PACKET DEVICE data from the ATA or ATAPI device.

Some SATLs may modify ATA IDENTIFY DEVICE data or ATA IDENTIFY PACKET DEVICE data. If a SCSI application client requires the unmodified ATA IDENTIFY DEVICE data or ATA IDENTIFY PACKET DEVICE data, then the ATA PASS-THROUGH command should be used to retrieve the ATA IDENTIFY DEVICE data or ATA IDENTIFY PACKET DEVICE data.

Table 116 defines the ATA Information VPD page.

Table 116 — ATA Information VPD page

Byte\Bit	7	6	5	4	3	2	1	0
0	PERIPHERAL QUALIFIER			PERIPHERAL DEVICE TYPE				
1	PAGE CODE (89h)							
2	(MSB)	PAGE LENGTH (238h)						
3								(LSB)
4	Reserved							
7								
8	SAT VENDOR IDENTIFICATION							
15								
16	SAT PRODUCT IDENTIFICATION							
31								
32	SAT PRODUCT REVISION LEVEL							
35								
36	ATA device signature (see 12.4.2.2)							
55								
56	COMMAND CODE							
57	Reserved							
59								
60	ATA IDENTIFY DEVICE data or ATA IDENTIFY PACKET DEVICE data (see 12.4.2.3)							
571								

The PERIPHERAL QUALIFIER field and the PERIPHERAL DEVICE TYPE field shall be set as described in 8.1.2.

The PAGE CODE field shall be set to 89h.

The PAGE LENGTH field shall be set to 238h.

Page: 153

Number: 1 Author: Kevin_Marks Subject: Cross-Out Date: 8/27/2008 8:13:25 PM -07'00'

Status
moverby Accepted 11/3/2008 10:50:34 PM

Number: 2 Author: Kevin_Marks Subject: Highlight Date: 8/27/2008 8:13:44 PM -07'00'

contain:
s/b
contains:

Status
moverby Accepted 11/3/2008 10:50:39 PM

Number: 3 Author: Kevin_Marks Subject: Highlight Date: 8/27/2008 8:15:30 PM -07'00'

command
s/b
command (see 12.2)

Status
moverby Accepted 11/3/2008 10:52:03 PM

Number: 4 Author: Kevin_Marks Subject: Highlight Date: 8/27/2008 8:15:04 PM -07'00'

the ATA
s/b
the unmodified ATA

Status
moverby Accepted 11/3/2008 10:51:03 PM

Number: 5 Author: HPQ-RElliott Subject: Highlight Date: 9/3/2008 9:42:24 AM -07'00'

ATA device signature

Since ata8-acs-r6 uses the terms "ATA device signature" and "ATAPI device signature", it may be best to rename this field to plain "device signature"

Status
moverby Accepted 11/3/2008 10:52:27 PM

Number: 6 Author: Kevin_Marks Subject: Highlight Date: 8/27/2008 8:17:02 PM -07'00'

The PAGE CODE field shall be set to 89h.
The PAGE LENGTH field shall be set to 238h.

already stated in table 116.

s/b

The PAGE CODE field and PAGE LENGTH field shall be set to as shown in table 116.

Status
moverby Accepted 11/3/2008 10:52:36 PM

Number: 7 Author: HPQ-RElliott Subject: Highlight Date: 9/3/2008 9:42:24 AM -07'00'

89h
s/b
the value defined in table 116

Status
moverby Accepted 11/3/2008 10:52:32 PM

Number: 8 Author: HPQ-RElliott Subject: Highlight Date: 9/3/2008 9:42:24 AM -07'00'

238h
s/b
the value defined in table 116

Status
moverby Accepted 11/3/2008 10:52:41 PM

The SAT VENDOR IDENTIFICATION field shall contain an 8-byte ASCII string identifying the vendor of the SATL. The data shall be left aligned within the field. The vendor identification string shall be one assigned by INCITS for use in the Standard INQUIRY data VENDOR IDENTIFICATION field. A list of assigned vendor identification strings is in SPC-3 and on the T10 web site (http://www.t10.org).

The SAT PRODUCT IDENTIFICATION field shall contain sixteen bytes of ASCII data as defined by the vendor of the SATL. The data shall be left-aligned within the field.

The SAT PRODUCT REVISION LEVEL field shall contain four bytes of ASCII data as defined by the vendor of the SATL. The data shall be left-aligned within the field.

The ATA device signature is described in 12.4.2.2.

The COMMAND CODE field contains the of the ATA command used to retrieve the data in the IDENTIFY DEVICE or IDENTIFY PACKET DEVICE DATA field. The possible command codes are:

a) ECh for an IDENTIFY DEVICE command (i.e., for an ATA device);
b) A1h for an IDENTIFY PACKET DEVICE command (i.e., for an ATAPI device); or
c) 00h for other device types.

The ATA IDENTIFY DEVICE data or ATA IDENTIFY PACKET DEVICE data is described in 12.4.2.3.

Page: 154

Number: 1 Author: Kevin_Marks Subject: Highlight Date: 8/27/2008 8:17:26 PM -07'00'

SPC-3
s/b
SPC-4

Status
moverby Accepted 11/3/2008 10:52:49 PM

Number: 2 Author: Kevin_Marks Subject: Highlight Date: 8/27/2008 8:19:13 PM -07'00'

the IDENTIFY DEVICE or IDENTIFY PACKET DEVICE DATA field
s/b
the ATA IDENTIFY DEVICE or ATA IDENTIFY PACKET DEVICE DATA field

Status
moverby Accepted 11/3/2008 10:53:51 PM

Number: 3 Author: Kevin_Marks Subject: Highlight Date: 8/27/2008 8:20:34 PM -07'00'

the of the ATA command

contains the what? should this be operation code or command code. Not sure what ATA calls it?

Status
moverby Accepted 11/3/2008 10:53:46 PM
Author: moverby Subject: Sticky Note Date: 11/3/2008 10:53:43 PM
Command code

Number: 4 Author: Kevin_Marks Subject: Highlight Date: 8/27/2008 8:20:55 PM -07'00'

IDENTIFY DEVICE
s/b
ATA IDENTIFY DEVICE

Status
moverby Accepted 11/3/2008 10:53:55 PM

Number: 5 Author: Kevin_Marks Subject: Highlight Date: 8/27/2008 8:21:10 PM -07'00'

IDENTIFY PACKET DEVICE
s/b
ATA IDENTIFY PACKET DEVICE

Status
moverby Accepted 11/3/2008 10:53:59 PM

12.4.2.2 ATA device signature

The ATA device signature shall contain the contents of the task file registers after the last power-on reset, hardware reset, software reset, or EXECUTE DEVICE DIAGNOSTIC command. The ATA device signature shall follow the format of the initial SATA Device-to-Host Register FIS (see SATA-2.6). Table 117 shows the ATA device signature.

Table 117 — ATA device signature

Byte\Bit	7	6	5	4	3	2	1	0
0	TRANSPORT IDENTIFIER							
1	Reserved	INTERRUPT/ Reserved[a]	Reserved		PM PORT / Reserved[a]			
2	STATUS[b]							
3	ERROR[b]							
4	LBA LOW[b]							
5	LBA MID[b]							
6	LBA HIGH[b]							
7	DEVICE[b]							
8	LBA LOW EXP[b]							
9	LBA MID EXP[b]							
10	LBA HIGH EXP[b]							
11	Reserved							
12	SECTOR COUNT[b]							
13	SECTOR COUNT EXP[b]							
14	Reserved							
19								

[a] The INTERRUPT bit and the PM PORT field are defined only if the TRANSPORT IDENTIFIER field is set to 34h (see SATA-2.6). Otherwise the INTERRUPT field and the PM PORT field are reserved.
[b] These fields are fields with the same names defined in ATA8-ACS.

The TRANSPORT IDENTIFIER field may contain the values shown in table 118.

Table 118 — TRANSPORT IDENTIFIER field ~~values~~

Code	Transport
00h	PATA (see ATA8-APT)
34h	SATA (see SATA-2.6)
All others	Reserved

The INTERRUPT bit corresponds to the “I” bit (i.e., bit 14 of dword 0) of the Register Device-to-Host FIS (see SATA-2.6).

All the remaining fields within the ATA device signature are defined in ATA8-APT and SATA-2.6.

Page: 155

Number: 1 Author: Kevin_Marks Subject: Highlight Date: 8/27/2008 8:22:36 PM -07'00'

EXECUTE
s/b
ATA EXECUTE

Status
moverby Accepted 11/3/2008 10:54:06 PM

Number: 2 Author: HPQ-RElliott Subject: Highlight Date: 9/3/2008 9:42:24 AM -07'00'

Footnote b is not consistent with field names ending with EXP any more, as ata8-acs-r6 does not use those names. It uses names like LBA LOW (7:0) and LBA LOW (15:8).

Rename the fields to match the ata8-acs-r6 terminology.

Status
moverby Accepted 11/4/2008 1:02:36 PM

Author: moverby Subject: Sticky Note Date: 11/3/2008 10:55:14 PM

Not sure what to call them. It seems like an odd name to call it LBA LOW (15:8) field.

Author: moverby Subject: Sticky Note Date: 11/4/2008 1:02:34 PM

Make these fields LBA (7:0) and so on.

Number: 3 Author: HPQ-RElliott Subject: Highlight Date: 9/3/2008 9:42:24 AM -07'00'

may contain the values shown in table 118
s/b
is defined in table 118

Status
moverby Accepted 11/3/2008 10:54:41 PM

Number: 4 Author: HPQ-RElliott Subject: Cross-Out Date: 9/3/2008 9:42:24 AM -07'00'

values

Status
moverby Accepted 11/3/2008 10:54:46 PM

12.4.2.3 ATA IDENTIFY DEVICE data or ATA IDENTIFY PACKET DEVICE data

If the command is an ATA IDENTIFY DEVICE command, and the command completes without error, then the IDENTIFY DEVICE OR IDENTIFY PACKET DEVICE DATA field shall contain the ATA IDENTIFY DEVICE data (ATA8-ACS).

If the command is an ATA IDENTIFY PACKET DEVICE command, and the command completes without error, then the IDENTIFY DEVICE OR IDENTIFY PACKET DEVICE DATA field shall contain the IDENTIFY PACKET DEVICE data (see ATA8-ACS).

The IDENTIFY DEVICE OR IDENTIFY PACKET DEVICE DATA field shall contains 512 bytes of 00h if:

a) the command is an IDENTIFY DEVICE command or an IDENTIFY PACKET DEVICE command and the command completes with an error; or
b) the command code is 00h (i.e., some other device type).

The data shall be presented with byte preservation (i.e., ATA byte n maps to SCSI byte n), as shown in table 119.

Table 119 — ATA IDENTIFY DEVICE data or ATA IDENTIFY PACKET DEVICE data

Byte	Contents
0	ATA IDENTIFY DEVICE data or ATA IDENTIFY PACKET DEVICE data word 0 bits 7:0 (i.e., byte 0)
1	ATA IDENTIFY DEVICE data or ATA IDENTIFY PACKET DEVICE data word 0 bits 15:8 (i.e., byte 1)
2	ATA IDENTIFY DEVICE data or ATA IDENTIFY PACKET DEVICE data word 1 bits 7:0 (i.e., byte 2)
3	ATA IDENTIFY DEVICE data or ATA IDENTIFY PACKET DEVICE data word 1 bits 15:8 (i.e., byte 3)
...	...
510	ATA IDENTIFY DEVICE data or ATA IDENTIFY PACKET DEVICE data word 255 bits 7:0 (i.e., the signature byte of the Integrity word, see ATA8-ACS)
511	ATA IDENTIFY DEVICE data or ATA IDENTIFY PACKET DEVICE data word 255 bits 15:8 (i.e., the checksum byte of the Integrity word, see ATA8-ACS)

NOTE 15 - Although the Serial number field (i.e., words 19:10), Firmware revision field (i.e., words 26:23), and Model number field (i.e., words 46:27) contain ASCII characters, every other byte is swapped within them (see ATA8-ACS) (e.g., the Serial number field is interpreted as: {word 10 bits 15:8, word 10 bits 7:0, word 11 bits 15:8, word 11 bits 7:0, ...}, which corresponds to these bytes in the IDENTIFY DEVICE OR IDENTIFY PACKET DEVICE DATA field: {byte 21, byte 20, byte 23, byte 22, etc.}).

Since some of the fields within the ATA IDENTIFY DEVICE data or ATA IDENTIFY PACKET DEVICE data may change depending on the state of the ATA device, the SATL shall resend the ATA IDENTIFY DEVICE command or ATA IDENTIFY PACKET DEVICE command to retrieve updated data whenever the ATA Information VPD page is requested.

12.5 SAT-specific Security Protocols

12.5.1 ATA Device Server Password Security Protocol

12.5.1.1 SECURITY PROTOCOL IN command

12.5.1.1.1 SECURITY PROTOCOL IN command overview

The SECURITY PROTOCOL IN command is used by the application client to cause the SATL to return ATA Security feature set data extracted from the IDENTIFY DEVICE data from the ATA device. See ATA8-ACS for a description of the ATA Security feature set ~~and all of the functions defined therein.~~

When the SECURITY PROTOCOL field is set to EFh in a SECURITY PROTOCOL IN command, the SECURITY PROTOCOL SPECIFIC field shall be set to zero. All other values of the SECURITY PROTOCOL SPECIFIC field are reserved.

Page: 156

Number: 1 Author: Kevin_Marks Subject: Cross-Out Date: 8/27/2008 8:24:02 PM -07'00'

Status
moverby Accepted 11/3/2008 10:55:20 PM

Number: 2 Author: Kevin_Marks Subject: Highlight Date: 8/28/2008 8:13:57 AM -07'00'

IDENTIFY DEVICE OR IDENTIFY PACKET DEVICE DATA field
s/b
ATA IDENTIFY DEVICE data or ATA IDENTIFY PACKET DEVICE data field

If following table 116

Status
moverby Accepted 11/3/2008 10:55:33 PM

Number: 3 Author: Kevin_Marks Subject: Highlight Date: 8/27/2008 8:26:57 PM -07'00'

IDENTIFY DEVICE OR IDENTIFY PACKET DEVICE DATA field
s/b
ATA IDENTIFY DEVICE data or ATA IDENTIFY PACKET DEVICE data field

If following table 116

Status
moverby Accepted 11/3/2008 10:55:38 PM

Number: 4 Author: Kevin_Marks Subject: Highlight Date: 8/27/2008 8:27:12 PM -07'00'

IDENTIFY DEVICE OR IDENTIFY PACKET DEVICE DATA field
s/b
ATA IDENTIFY DEVICE data or ATA IDENTIFY PACKET DEVICE data field

If following table 116

Status
moverby Accepted 11/3/2008 10:55:42 PM

Number: 5 Author: HPQ-RElliott Subject: Highlight Date: 9/3/2008 9:42:24 AM -07'00'

Security Protocols
s/b
lowercase and singular

and add "parameters" to match spc4 wording

Status
moverby Accepted 11/3/2008 10:55:55 PM

Number: 6 Author: HPQ-RElliott Subject: Highlight Date: 9/3/2008 9:42:24 AM -07'00'

Security Protocol
s/b
lowercase

Status
moverby Accepted 11/3/2008 10:56:06 PM

Number: 7 Author: Kevin_Marks Subject: Sticky Note Date: 8/28/2008 9:32:14 AM -07'00'

This should be in SPC-4, not SAT-2 :)

As it is currently defined, the translation is not included between these commands and ATA. Need to add. If this were in SPC-4, then this would be correct. and a translation would be in SAT.

Status
moverby Rejected 10/20/2008 5:33:47 PM -07'00'

Author: moverby Subject: Sticky Note Date: 10/20/2008 5:33:44 PM -07'00'

Deferred to SAT-3.

Number: 8 Author: Kevin_Marks Subject: Highlight Date: 8/28/2008 7:36:24 AM -07'00'

IDENTIFY
s/b
ATA IDENTIFY

Status
moverby Accepted 11/3/2008 10:56:11 PM

Number: 9 Author: Kevin_Marks Subject: Cross-Out Date: 8/28/2008 7:36:40 AM -07'00'

Status
moverby Accepted 11/3/2008 10:56:22 PM

Number: 10 Author: LSI-Penokie Subject: Highlight Date: 8/20/2008 3:32:34 PM -07'00'

This should be << defined in this standard >>..

Status
moverby Rejected 11/3/2008 10:56:40 PM

Author: moverby Subject: Sticky Note Date: 11/3/2008 10:56:35 PM

Rejected in favor of Kevin Mark's rewrite.

Number: 11 Author: Kevin_Marks Subject: Highlight Date: 8/28/2008 7:37:39 AM -07'00'

command, the
s/b
command, then the

Status
moverby Accepted 11/3/2008 10:56:45 PM

Number: 12 Author: Kevin_Marks Subject: Highlight Date: 8/28/2008 7:37:25 AM -07'00'

Comments from page 156 continued on next page

12.4.2.3 ATA IDENTIFY DEVICE data or ATA IDENTIFY PACKET DEVICE data

If the command is an ATA IDENTIFY DEVICE command~~,~~ and the command completes without error, then the IDENTIFY DEVICE OR IDENTIFY PACKET DEVICE DATA field shall contain the ATA IDENTIFY DEVICE data (ATA8-ACS).

If the command is an ATA IDENTIFY PACKET DEVICE command, and the command completes without error, then the IDENTIFY DEVICE OR IDENTIFY PACKET DEVICE DATA field shall contain the IDENTIFY PACKET DEVICE data (see ATA8-ACS).

The IDENTIFY DEVICE OR IDENTIFY PACKET DEVICE DATA field shall contains 512 bytes of 00h if:

a) the command is an IDENTIFY DEVICE command or an IDENTIFY PACKET DEVICE command and the command completes with an error; or
b) the command code is 00h (i.e., some other device type).

The data shall be presented with byte preservation (i.e., ATA byte n maps to SCSI byte n), as shown in table 119.

Table 119 — ATA IDENTIFY DEVICE data or ATA IDENTIFY PACKET DEVICE data

Byte	Contents
0	ATA IDENTIFY DEVICE data or ATA IDENTIFY PACKET DEVICE data word 0 bits 7:0 (i.e., byte 0)
1	ATA IDENTIFY DEVICE data or ATA IDENTIFY PACKET DEVICE data word 0 bits 15:8 (i.e., byte 1)
2	ATA IDENTIFY DEVICE data or ATA IDENTIFY PACKET DEVICE data word 1 bits 7:0 (i.e., byte 2)
3	ATA IDENTIFY DEVICE data or ATA IDENTIFY PACKET DEVICE data word 1 bits 15:8 (i.e., byte 3)
...	...
510	ATA IDENTIFY DEVICE data or ATA IDENTIFY PACKET DEVICE data word 255 bits 7:0 (i.e., the signature byte of the Integrity word, see ATA8-ACS)
511	ATA IDENTIFY DEVICE data or ATA IDENTIFY PACKET DEVICE data word 255 bits 15:8 (i.e., the checksum byte of the Integrity word, see ATA8-ACS)

NOTE 15 - Although the Serial number field (i.e., words 19:10), Firmware revision field (i.e., words 26:23), and Model number field (i.e., words 46:27) contain ASCII characters, every other byte is swapped within them (see ATA8-ACS) (e.g., the Serial number field is interpreted as: {word 10 bits 15:8, word 10 bits 7:0, word 11 bits 15:8, word 11 bits 7:0, ...}, which corresponds to these bytes in the IDENTIFY DEVICE OR IDENTIFY PACKET DEVICE DATA field: {byte 21, byte 20, byte 23, byte 22, etc.}).

Since some of the fields within the ATA IDENTIFY DEVICE data or ATA IDENTIFY PACKET DEVICE data may change depending on the state of the ATA device, the SATL shall resend the ATA IDENTIFY DEVICE command or ATA IDENTIFY PACKET DEVICE command to retrieve updated data whenever the ATA Information VPD page is requested.

12.5 SAT-specific Security Protocols

12.5.1 ATA Device Server Password Security Protocol

12.5.1.1 SECURITY PROTOCOL IN command

12.5.1.1.1 SECURITY PROTOCOL IN command overview

The SECURITY PROTOCOL IN command is used by the application client to cause the SATL to return ATA Security feature set data extracted from the IDENTIFY DEVICE data from the ATA device. See ATA8-ACS for a description of the ATA Security feature set~~ and all of the functions defined therein.~~

When the SECURITY PROTOCOL field is set to EFh in a SECURITY PROTOCOL IN command, the SECURITY PROTOCOL SPECIFIC field shall be set to zero. All other values of the SECURITY PROTOCOL SPECIFIC field are reserved.

When
s/b
If

Status
moverby Accepted 11/3/2008 10:56:51 PM

~~The INC_512 bit shall be set to zero. If a SECURITY PROTOCOL IN command is received with the INC_512 bit is set to one, then the SECURITY PROTOCOL IN command shall be terminated with CHECK CONDITION status, with the sense key set to ILLEGAL REQUEST, and the additional sense code set to INVALID FIELD IN CDB.~~

All other CDB fields for SECURITY PROTOCOL IN command shall meet the requirements stated in SPC-4.

12.5.1.1.2 SECURITY PROTOCOL IN parameter data

Table 120 defines the parameter data sent in response to for the set password function.

Table 120 — SECURITY PROTOCOL IN parameter data

Byte \ Bit	7	6	5	4	3	2	1	0
0	Reserved							
1	PARAMETER LIST LENGTH							
2	(MSB)	SECURITY ERASE TIME						
3								(LSB)
4	(MSB)	ENHANCED SECURITY ERASE TIME						
5								(LSB)
6	(MSB)	MASTER PASSWORD IDENTIFIER						
7								(LSB)
8	Reserved							MAXSET
9	Reserved		EN_ER_SUP	PWCNTEX	FROZEN	LOCKED	S_ENABLD	S_SUPRT
10	Reserved							
15	Reserved							

PARAMETER LIST LENGTH shall be set to the number of bytes following byte 1 of the SECURITY PROTOCOL IN parameter data.

If the ATA Security feature set supported (S_SUPRT) bit is set to zero, then the ATA device does not support the ATA Security feature set. If the S_SUPRT bit is set to one, then the ATA device supports the ATA Security feature set.

If the ATA Security feature set enabled (S_ENABLD) bit is set to zero, then the ATA Security feature set is not enabled in the ATA device. If the S_ENABLD bit is set to one, then the ATA Security feature set is enabled in the ATA device based on the setting of the user password via a set password function (see 12.5.1.2.1).

The value in the SECURITY ERASE TIME field indicates the time required by the ATA device to complete its security erase procedure in normal mode. ~~Table 121 defines the values in the SECURITY ERASE TIME field.~~

Page: 157

Number: 1 Author: HPQ-RElliott Subject: Cross-Out Date: 9/3/2008 9:42:24 AM -07'00'

Delete:

The INC_512 bit shall be set to zero. If a SECURITY PROTOCOL IN command is received with the INC_512 bit is set to one, then the SECURITY PROTOCOL IN command shall be terminated with CHECK CONDITION status, with the sense key set to ILLEGAL REQUEST, and the additional sense code set to INVALID FIELD IN CDB.

This is unnecessary. A SATL should be allowed to return 512 byte chunks of data with padding. Ease of mapping into ATA was touted as the reason the INC_512 bit was proposed.

Status
moverby Rejected 9/9/2008 3:46:17 PM -07'00'

Author: moverby Subject: Sticky Note Date: 9/9/2008 3:46:12 PM -07'00'

This is required by the nature of the way ATA security works (the way passwords are transmitted)

Number: 2 Author: HPQ-RElliott Subject: Highlight Date: 9/3/2008 9:42:24 AM -07'00'

in response to for the
s/b
??

Number: 3 Author: Kevin_Marks Subject: Highlight Date: 8/28/2008 7:49:57 AM -07'00'

for the set password function.
s/b
a SECURITY PROTOCOL IN command with the SECURITY PROTOCOL field set to EFh.

Number: 4 Author: HPQ-RElliott Subject: Highlight Date: 9/3/2008 9:42:24 AM -07'00'

set password function

The "set password function" has not been defined for SP IN (unlike SP OUT). This should probably be "for the ATA Device Server Password security protocol" since there are no subfunctions defined.

Number: 5 Author: Kevin_Marks Subject: Highlight Date: 8/28/2008 7:50:49 AM -07'00'

PARAMETER LIST LENGTH
s/b
PARAMETER LIST LENGTH (0Dh)

Number: 6 Author: HPQ-RElliott Subject: Highlight Date: 9/3/2008 9:42:24 AM -07'00'

LENGTH
s/b
LENGTH (13)

since it is known.
(assuming the paragraph below is accurate)

Number: 7 Author: HPQ-RElliott Subject: Note Date: 9/3/2008 9:42:24 AM -07'00'

10-15 should be one straddled Reserved field

Number: 8 Author: Kevin_Marks Subject: Highlight Date: 8/28/2008 7:51:34 AM -07'00'

PARAMETER LIST LENGTH shall be set to the number of bytes following byte 1 of the SECURITY PROTOCOL IN parameter data.

s/b
The PARAMETER LIST LENGTH field shall be set to a shown in table 120.

Number: 9 Author: Kevin_Marks Subject: Highlight Date: 8/28/2008 7:50:57 AM -07'00'

Number: 10 Author: HPQ-RElliott Subject: Highlight Date: 9/3/2008 9:42:24 AM -07'00'

PARAMETER LIST LENGTH
s/b
The PARAMETER LIST LENGTH field

Number: 11 Author: Kevin_Marks Subject: Highlight Date: 8/28/2008 9:24:47 AM -07'00'

If the ATA Security feature set supported (S_SUPRT) bit is set to zero, then the ATA device does not support the ATA Security feature set. If the S_SUPRT bit is set to one, then the ATA device supports the ATA Security feature set.

s/b

If the ATA IDENTIFY DEVICE data word 82 bit 1 is set to zero, then the SATL shall set the ATA Security feature set supported (S_SUPRT) bit to zero. If the ATA IDENTIFY DEVICE data word 82 bit 1 is set to one, then the SATL shall set the ATA Security feature set supported (S_SUPRT) bit to one.

Number: 12 Author: HPQ-RElliott Subject: Note Date: 9/3/2008 9:42:24 AM -07'00'

(global)

SAT-2 needs to define specifically how to translate ATA information into these SCSI fields. What IDENTIFY DEVICE data word and bit cause S_SUPRT to be set to one and zero?

Status
moverby Accepted 11/4/2008 1:00:32 PM

Comments from page 157 continued on next page

~~The INC_512 bit shall be set to zero. If a SECURITY PROTOCOL IN command is received with the INC_512 bit is set to one, then the SECURITY PROTOCOL IN command shall be terminated with CHECK CONDITION status, with the sense key set to ILLEGAL REQUEST, and the additional sense code set to INVALID FIELD IN CDB.~~

All other CDB fields for SECURITY PROTOCOL IN command shall meet the requirements stated in SPC-4.

12.5.1.1.2 SECURITY PROTOCOL IN parameter data

Table 120 defines the parameter data sent in response to for the set password function.

Table 120 — SECURITY PROTOCOL IN parameter data

Byte \ Bit	7	6	5	4	3	2	1	0
0	Reserved							
1	PARAMETER LIST LENGTH							
2	(MSB)	SECURITY ERASE TIME						
3								(LSB)
4	(MSB)	ENHANCED SECURITY ERASE TIME						
5								(LSB)
6	(MSB)	MASTER PASSWORD IDENTIFIER						
7								(LSB)
8	Reserved							MAXSET
9	Reserved		EN_ER_SUP	PWCNTEX	FROZEN	LOCKED	S_ENABLD	S_SUPRT
10	Reserved							
15	Reserved							

PARAMETER LIST LENGTH shall be set to the number of bytes following byte 1 of the SECURITY PROTOCOL IN parameter data.

If the ATA Security feature set supported (S_SUPRT) bit is set to zero, then the ATA device does not support the ATA Security feature set. If the S_SUPRT bit is set to one, then the ATA device supports the ATA Security feature set.

If the ATA Security feature set enabled (S_ENABLD) bit is set to zero, then the ATA Security feature set is not enabled in the ATA device. If the S_ENABLD bit is set to one, then the ATA Security feature set is enabled in the ATA device based on the setting of the user password via a set password function (see 12.5.1.2.1).

The value in the SECURITY ERASE TIME field indicates the time required by the ATA device to complete its security erase procedure in normal mode. ~~Table 121 defines the values in the SECURITY ERASE TIME field.~~

Author: moverby Subject: Sticky Note Date: 11/4/2008 1:00:29 PM
Resolved by Kevin Marks comment

Number: 13 Author: moverby Subject: Inserted Text Date: 11/4/2008 12:59:28 PM
is

Status
moverby Accepted 11/4/2008 1:00:38 PM

Number: 14 Author: HPQ-RElliott Subject: Note Date: 9/3/2008 9:42:24 AM -07'00'
Field definition paragraphs should be top-to-bottom, left-to-right.

Status
moverby Accepted 11/3/2008 10:57:30 PM

Number: 15 Author: Kevin_Marks Subject: Highlight Date: 8/28/2008 8:18:43 AM -07'00'
If the ATA Security feature set enabled (S_ENABLD) bit is set to zero, then the ATA Security feature set is not enabled in the ATA device. If the S_ENABLD bit is set to one, then the ATA Security feature set is enabled in the ATA device based on the setting of the user password via a set password function (see 12.5.1.2.1).

s/b

If the ATA IDENTIFY DEVICE data word 85 bit 1 is set to zero, then the SATL shall set the ATA Security feature set enabled (S_ENABLD) bit to zero. If the ATA IDENTIFY DEVICE data word 85 bit 1 is set to one, then the SATL shall set the ATA Security feature set enabled (S_ENABLD) bit to one. Enabling of this bit is based on setting of the user password via a set password function (see 12.5.1.2.1).

Status
moverby Accepted 11/4/2008 1:00:05 PM

Number: 16 Author: moverby Subject: Inserted Text Date: 11/4/2008 12:59:34 PM
is

Status
moverby Accepted 11/4/2008 1:00:44 PM

Number: 17 Author: Kevin_Marks Subject: Highlight Date: 8/28/2008 9:20:15 AM -07'00'
The value in the SECURITY ERASE TIME field indicates the time required by the ATA device to complete its security erase procedure in normal mode.

s/b

The value in the SECURITY ERASE TIME field indicates the time required by the ATA device to complete its security erase procedure in normal mode. The SATL shall set the least significant byte of the SECURITY ERASE TIME field to the ATA IDENTIFY DEVICE data word 89 bits (0:7) and the most significant byte of the SECURITY ERASE TIME field to 00h.

Status
moverby Accepted 11/4/2008 1:00:53 PM

Number: 18 Author: Kevin_Marks Subject: Cross-Out Date: 8/28/2008 9:11:23 AM -07'00'

Status
moverby Accepted 11/4/2008 1:00:58 PM

Number: 19 Author: Kevin_Marks Subject: Highlight Date: 8/28/2008 9:19:40 AM -07'00'
i

Status
moverby Rejected 11/3/2008 10:57:55 PM

Author: moverby Subject: Sticky Note Date: 11/3/2008 10:57:52 PM
Comment makes no requested changes

1 The value in the ENHANCED SECURITY ERASE TIME field indicates the time required by the ATA device to complete its security erase procedure in enhanced mode. Table 121 defines the values in the ENHANCED SECURITY ERASE TIME field.

2 ~~Table 121 — SECURITY ERASE TIME and ENHANCED SECURITY ERASE TIME field definition~~

~~Value~~	~~Time required for erase process~~
~~0000h~~	~~The time is not specified or the ATA Security feature set is not supported~~
~~0001h - 00FEh~~	~~(Value in the field) x 2 minutes~~
~~00FFh~~	~~Greater than 508 minutes~~
~~0100h - FFFFh~~	~~Reserved~~

3 If the ATA device does not support the ATA Security feature set (i.e., the S_SUPRT bit is set to zero) or the master password identifier, then the MASTER PASSWORD IDENTIFIER field shall be set to 0000h or FFFFh. If the ATA device supports the ATA Security feature set and the master password identifier, then the MASTER PASSWORD IDENTIFIER field shall be set to the master password identifier set when the master password was last changed.

4 If the master password capability setting (MAXSET) bit is set to zero, and the ATA Security feature set is enabled (i.e., the S_ENABLD bit is set to one), then the security level is set to high. If the MAXSET bit is set to one, then the security level is set to maximum.

5 If the enhanced erase mode supported (EN_ER_SUP) bit is set to zero, then the ATA device does not support the enhanced erase mode. If the EN_ER_SUP bit is set to one, then the ATA device supports the enhanced erase mode.

6 If the password attempt counter exceeded (PWCNTEX) bit is set to zero, then the password attempt counter has not decremented to zero. If the PWCNTEX bit is set to one, then the password attempt counter has decremented to zero.

7 If the frozen state (FROZEN) bit is set to zero, then the ATA device is not in the security frozen state. If the FROZEN bit is set to one, then the ATA device is in the security frozen state.

8 If the locked state (LOCKED) bit is set to zero, then the ATA device is not in the security locked state. If the LOCKED bit is set to one, then the ATA device is in the security locked state.

12.5.1.1.3 SCSI commands allowed in the presence of various security modes

Certain commands may be allowed or conflict depending on the security mode setting that is in effect for an ATA device.

There are three possible modes:

a) security locked;
b) security unlocked or security disabled; and
c) security frozen.

If a SATL receives a command that is allowed for the current security mode setting of the ATA device, then the SATL translates the command and sends it to the ATA device. If a SATL receives a command that conflicts with the current security mode setting of the , then the SATL shall terminate the command with CHECK CONDITION status with the sense key set to ILLEGAL REQUEST and the additional sense code set to ATA SECURITY CONFLICT.

Table 122 shows the commands defined in SPC-4 and whether each command is allowed or conflicts depending on the security setting that is in effect for an ATA device. If a command in table 122 is not implemented by the SATL, then processing of the command is vendor specific.

Page: 158

Number: 1 Author: Kevin_Marks Subject: Highlight Date: 8/28/2008 9:18:29 AM -07'00'

The value in the ENHANCED SECURITY ERASE TIME field indicates the time required by the ATA device to complete its security erase procedure in enhanced mode. Table 121 defines the values in the ENHANCED SECURITY ERASE TIME field.

s/b

The value in the ENHANCED SECURITY ERASE TIME field indicates the time required by the ATA device to complete its security erase procedure in enhanced mode. The SATL shall set the least significant byte of the ENHANCED SECURITY ERASE TIME field to the the ATA IDENTIFY DEVICE data word 90 bits (0:7) and the most significant byte of the ENHANCED SECURITY ERASE TIME field to 00h.

Number: 2 Author: Kevin_Marks Subject: Cross-Out Date: 8/28/2008 9:11:29 AM -07'00'

Number: 3 Author: Kevin_Marks Subject: Highlight Date: 8/28/2008 9:17:38 AM -07'00'

If the ATA device does not support the ATA Security feature set (i.e., the S_SUPRT bit is set to zero) or the master password identifier, then the MASTER PASSWORD IDENTIFIER field shall be set to 0000h or FFFFh. If the ATA device supports the ATA Security feature set and the master password identifier, then the MASTER PASSWORD IDENTIFIER field shall be set to the master password identifier set when the master password was last changed.

s/b

The SATL shall set the MASTER PASSWORD IDENTIFIER field to the ATA IDENTIFY DEVICE data word 82.

Status
moverby Accepted 11/4/2008 1:19:45 PM

Number: 4 Author: Kevin_Marks Subject: Highlight Date: 8/28/2008 10:12:42 AM -07'00'

If the master password capability setting (MAXSET) bit is set to zero, and the ATA Security feature set is enabled (i.e., the S_ENABLD bit is set to one), then the security level is set to high. If the MAXSET bit is set to one, then the security level is set to maximum.

s/b

If the ATA IDENTIFY DEVICE data word 128 bit 8 is set to zero, then the SATL shall set the master password capability setting (MAXSET) bit to zero. If the ATA IDENTIFY DEVICE data word 128 bit 8 is set to one, then the SATL shall set the master password capability setting (MAXSET) bit to one.

Status
moverby Accepted 11/4/2008 1:19:39 PM

Number: 5 Author: Kevin_Marks Subject: Highlight Date: 8/28/2008 10:12:27 AM -07'00'

If the enhanced erase mode supported (EN_ER_SUP) bit is set to zero, then the ATA device does not support the enhanced erase mode. If the EN_ER_SUP bit is set to one, then the ATA device supports the enhanced erase mode.

s/b

If the ATA IDENTIFY DEVICE data word 128 bit 5 is set to zero, then the SATL shall set the enhanced erase mode supported (EN_ER_SUP) bit to zero. If the ATA IDENTIFY DEVICE data word 128 bit 5 is set to one, then the SATL shall set the enhanced erase mode supported (EN_ER_SUP) bit to one.

Status
moverby Accepted 11/4/2008 1:19:31 PM

Number: 6 Author: Kevin_Marks Subject: Highlight Date: 8/28/2008 10:13:55 AM -07'00'

If the password attempt counter exceeded (PWCNTEX) bit is set to zero, then the password attempt counter has not decremented to zero. If the PWCNTEX bit is set to one, then the password attempt counter has decremented to zero.

s/b

If the ATA IDENTIFY DEVICE data word 128 bit 4 is set to zero, then the SATL shall set the password attempt counter exceeded (PWCNTEX) bit to zero. If the ATA IDENTIFY DEVICE data word 128 bit 4 is set to one, then the SATL shall set the password attempt counter exceeded (PWCNTEX) bit to one.

Status
moverby Accepted 11/4/2008 1:19:25 PM

Number: 7 Author: Kevin_Marks Subject: Highlight Date: 8/28/2008 10:14:42 AM -07'00'

If the frozen state (FROZEN) bit is set to zero, then the ATA device is not in the security frozen state. If the FROZEN bit is set to one, then the ATA device is in the security frozen state.

s/b

If the ATA IDENTIFY DEVICE data word 128 bit 3 is set to zero, then the SATL shall set the frozen state (FROZEN) bit to zero. If the ATA IDENTIFY DEVICE data word 128 bit 3 is set to one, then the SATL shall set the frozen state (FROZEN) bit to one.

Status
moverby Accepted 11/4/2008 1:19:20 PM

Number: 8 Author: Kevin_Marks Subject: Highlight Date: 8/28/2008 10:15:29 AM -07'00'

If the locked state (LOCKED) bit is set to zero, then the ATA device is not in the security locked state. If the LOCKED bit is set to one, then the ATA device is in the security locked state.

s/b

If the ATA IDENTIFY DEVICE data word 128 bit 2 is set to zero, then the SATL shall set the locked state (LOCKED) bit to zero. If the ATA IDENTIFY DEVICE data word 128 bit 2 is set to one, then the SATL shall set the locked state (LOCKED) bit to one.

Comments from page 158 continued on next page

The value in the ENHANCED SECURITY ERASE TIME field indicates the time required by the ATA device to complete its security erase procedure in enhanced mode. Table 121 defines the values in the ENHANCED SECURITY ERASE TIME field.

~~Table 121 — SECURITY ERASE TIME and ENHANCED SECURITY ERASE TIME field definition~~

~~Value~~	~~Time required for erase process~~
~~0000h~~	~~The time is not specified or the ATA Security feature set is not supported~~
~~0001h - 00FEh~~	~~(Value in the field) x 2 minutes~~
~~00FFh~~	~~Greater than 508 minutes~~
~~0100h - FFFFh~~	~~Reserved~~

If the ATA device does not support the ATA Security feature set (i.e., the S_SUPRT bit is set to zero) or the master password identifier, then the MASTER PASSWORD IDENTIFIER field shall be set to 0000h or FFFFh. If the ATA device supports the ATA Security feature set and the master password identifier, then the MASTER PASSWORD IDENTIFIER field shall be set to the master password identifier set when the master password was last changed.

If the master password capability setting (MAXSET) bit is set to zero, and the ATA Security feature set is enabled (i.e., the S_ENABLD bit is set to one), then the security level is set to high. If the MAXSET bit is set to one, then the security level is set to maximum.

If the enhanced erase mode supported (EN_ER_SUP) bit is set to zero, then the ATA device does not support the enhanced erase mode. If the EN_ER_SUP bit is set to one, then the ATA device supports the enhanced erase mode.

If the password attempt counter exceeded (PWCNTEX) bit is set to zero, then the password attempt counter has not decremented to zero. If the PWCNTEX bit is set to one, then the password attempt counter has decremented to zero.

If the frozen state (FROZEN) bit is set to zero, then the ATA device is not in the security frozen state. If the FROZEN bit is set to one, then the ATA device is in the security frozen state.

If the locked state (LOCKED) bit is set to zero, then the ATA device is not in the security locked state. If the LOCKED bit is set to one, then the ATA device is in the security locked state.

12.5.1.1.3 SCSI commands allowed in the presence of various security modes

Certain commands may be allowed or conflict depending on the security mode setting that is in effect for an ATA device.

There are three possible modes:

a) security locked;
b) security unlocked or security disabled; and
c) security frozen.

If a SATL receives a command that is allowed for the current security mode setting of the ATA device, then the SATL translates the command and sends it to the ATA device. If a SATL receives a command that conflicts with the current security mode setting of the , then the SATL shall terminate the command with CHECK CONDITION status with the sense key set to ILLEGAL REQUEST and the additional sense code set to ATA SECURITY CONFLICT.

Table 122 shows the commands defined in SPC-4 and whether each command is allowed or conflicts depending on the security setting that is in effect for an ATA device. If a command in table 122 is not implemented by the SATL, then processing of the command is vendor specific.

Status
moverby Accepted 11/4/2008 1:19:14 PM

Number: 9 Author: HPQ-RElliott Subject: Note Date: 9/3/2008 9:42:24 AM -07'00'

The SATL needs to snoop the current security mode to implement table 123. What it is expected to snoop to do that should be defined.

Status
moverby Rejected 9/9/2008 3:48:13 PM -07'00'

Author: moverby Subject: Sticky Note Date: 9/9/2008 3:48:10 PM -07'00'

Rejected. Addressed by changes made elsewhere in the security protocol definition for ATA security.

Number: 10 Author: Kevin_Marks Subject: Highlight Date: 8/28/2008 10:17:01 AM -07'00'

the command and
s/b
the command and defined in this standard and

Status
moverby Accepted 11/3/2008 10:59:54 PM

Author: moverby Subject: Sticky Note Date: 11/3/2008 10:59:51 PM

the command as defined in this standard

Number: 11 Author: LSI-Penokie Subject: Highlight Date: 8/20/2008 3:36:06 PM -07'00'

This should be << mode setting, then the SATL shall

Status
moverby Accepted 11/3/2008 10:58:53 PM

Number: 12 Author: HPQ-RElliott Subject: Highlight Date: 9/3/2008 9:42:24 AM -07'00'

of the , then
s/b
??

Status
moverby Accepted 11/3/2008 10:59:24 PM

Author: moverby Subject: Sticky Note Date: 11/3/2008 10:59:20 PM

setting, then

Status
moverby Accepted 11/3/2008 10:59:19 PM

Number: 13 Author: Kevin_Marks Subject: Highlight Date: 8/28/2008 10:17:25 AM -07'00'

of the , then
s/b
of the ATA device, then

Status
moverby Accepted 11/3/2008 10:59:03 PM

Number: 14 Author: Kevin_Marks Subject: Highlight Date: 8/28/2008 1:19:24 PM -07'00'

If a command in table 122 is not implemented by the SATL, then processing of the command is vendor specific.

What? If it is not supported, then SATL shall check condition the command with ILLEGAL REQUEST, and ASC = INVALID COMMAND OPERATION CODE.

Status
moverby Accepted 11/4/2008 1:02:57 PM

Author: moverby Subject: Sticky Note Date: 11/3/2008 10:58:48 PM

Agreed.

Table 122 — SPC commands allowed in the presence of various security modes (part 1 of 3)

Command	Locked	Unlocked or Disabled	Frozen
ACCESS CONTROL IN[1]	Allowed	Allowed	Allowed
ACCESS CONTROL OUT[1]	Allowed	Allowed	Allowed
CHANGE ALIASES[1]	Allowed	Allowed	Allowed
EXTENDED COPY[1]	Conflict	Allowed	Allowed
INQUIRY	Allowed	Allowed	Allowed
LOG SELECT	Allowed[2]	Allowed	Allowed
LOG SENSE[1]	Allowed	Allowed	Allowed
MANAGEMENT PROTOCOL IN[1]	Allowed	Allowed	Allowed
MANAGEMENT PROTOCOL OUT[1]	??	Allowed	Allowed
MODE SELECT(6) / MODE SELECT(10)			
Control mode page	Allowed	Allowed	Allowed
Disconnect-Reconnect mode page[1]	Allowed	Allowed	Allowed
Informational Exceptions Control mode page	Allowed	Allowed	Allowed
Power Condition mode page[1]	Allowed	Allowed	Allowed
Protocol Specific Logical Unit mode page[1]	Allowed	Allowed	Allowed
Protocol Specific Port mode page[1]	Allowed	Allowed	Allowed
Read-Write Error Recovery mode page	Allowed	Allowed	Allowed
Verify Error Recovery mode page[1]	Allowed	Allowed	Allowed
Caching mode page	Allowed	Allowed	Allowed
XOR Control mode page[1]	Allowed	Allowed	Allowed
Enclosure Services Management mode page[1]	Allowed	Allowed	Allowed
Background Control mode page[1]	Allowed	Allowed	Allowed
MODE SENSE(6) / MODE SENSE(10)	Allowed	Allowed	Allowed
PERSISTENT RESERVE IN[1]	Allowed	Allowed	Allowed
PERSISTENT RESERVE OUT			
REGISTER[1]	Allowed	Allowed	Allowed
RESERVE[1]	Allowed	Allowed	Allowed
RELEASE[1]	Allowed	Allowed	Allowed
CLEAR[1]	Allowed	Allowed	Allowed
PREEMPT[1]	Allowed	Allowed	Allowed

[1]ATA SECURITY CONFLICT shall not be returned for this command.
[2]Allowed unless otherwise specified.

Page: 159

Number: 1 Author: Kevin_Marks Subject: Highlight Date: 8/28/2008 10:20:23 AM -07'00'

various security modes
s/b
various ATA security modes

Status
moverby Accepted 11/3/2008 11:00:08 PM

Number: 2 Author: HPQ-RElliott Subject: Note Date: 9/3/2008 9:42:24 AM -07'00'

Define what shading means in a table footnote.

Status
moverby Accepted 11/3/2008 11:00:42 PM

Author: moverby Subject: Sticky Note Date: 11/3/2008 11:00:37 PM

Remove shading

Number: 3 Author: Kevin_Marks Subject: Sticky Note Date: 8/28/2008 10:22:38 AM -07'00'

I assume that the shaded rows are commands not translated in this standard. This is not stated, and LOG SELECT is not in this standard, but LOG SENSE is?

Status
moverby Accepted 11/3/2008 11:00:53 PM

Author: moverby Subject: Sticky Note Date: 11/3/2008 11:00:50 PM

Remove shading

Number: 4 Author: HPQ-RElliott Subject: Highlight Date: 9/3/2008 9:42:24 AM -07'00'

Fix ??

Status
moverby Accepted 11/3/2008 11:01:21 PM

Author: moverby Subject: Sticky Note Date: 11/3/2008 11:01:18 PM

Allowed

Number: 5 Author: Kevin_Marks Subject: Highlight Date: 8/28/2008 10:21:26 AM -07'00'

??

ok, didn't know we supported ?? in standards.

Status
moverby Accepted 11/3/2008 11:01:30 PM

Author: moverby Subject: Sticky Note Date: 11/3/2008 11:01:27 PM

Allowed

Number: 6 Author: LSI-Penokie Subject: Highlight Date: 8/20/2008 3:37:19 PM -07'00'

This needs to be replaced with conflict or allowed.

Status
moverby Accepted 11/3/2008 11:01:12 PM

Author: moverby Subject: Sticky Note Date: 11/3/2008 11:01:09 PM

Allowed

Number: 7 Author: moverby Subject: Highlight Date: 9/9/2008 5:06:49 PM -07'00'

This should not be ??. Replace with the same text as MANAGEMENT PROTOCOL IN.

Status
moverby Accepted 9/9/2008 3:48:29 PM -07'00'

Number: 8 Author: HPQ-RElliott Subject: Note Date: 9/3/2008 9:42:24 AM -07'00'

Rather than try to list each mode page, combine all the entries into one row:
"All other mode pages"

Status
moverby Accepted 11/3/2008 11:01:47 PM

Number: 9 Author: LSI-Penokie Subject: Sticky Note Date: 8/20/2008 3:39:12 PM -07'00'

Table 122 footnotes need to be a and b not 1 and 2.

Status
moverby Accepted 11/3/2008 11:01:55 PM

Number: 10 Author: HPQ-RElliott Subject: Highlight Date: 9/3/2008 9:42:24 AM -07'00'

Table footnotes 1 and 2 should be a and b

Status
moverby Accepted 11/3/2008 11:01:59 PM

Table 122 — SPC commands allowed in the presence of various security modes (part 2 of 3)

Command	Locked	Unlocked or Disabled	Frozen
PREEMPT AND ABORT[1]	Allowed	Allowed	Allowed
REGISTER AND IGNORE EXISTING KEY[1]	Allowed	Allowed	Allowed
REGISTER AND MOVE[1]	Allowed	Allowed	Allowed
READ ATTRIBUTE[1]	Allowed	Allowed	Allowed
READ BUFFER	Allowed	Allowed	Allowed
READ MEDIA SERIAL NUMBER[1]	Allowed	Allowed	Allowed
RECEIVE COPY RESULTS[1]	Allowed	Allowed	Allowed
RECEIVE DIAGNOSTIC RESULTS[1]	Allowed	Allowed	Allowed
RELEASE(6) / RELEASE(10)[1]	Allowed	Allowed	Allowed
REPORT ALIASES[1]	Allowed	Allowed	Allowed
REPORT IDENTIFYING INFORMATION[1]	Allowed	Allowed	Allowed
REPORT LUNS[1]	Allowed	Allowed	Allowed
REPORT PRIORITY[1]	Allowed	Allowed	Allowed
REPORT SUPPORTED OPERATION CODES[1]	Allowed	Allowed	Allowed
REPORT SUPPORTED TASK MANAGEMENT FUNCTIONS[1]	Allowed	Allowed	Allowed
REPORT TARGET PORT GROUPS[1]	Allowed	Allowed	Allowed
REPORT TIMESTAMP[1]	Allowed	Allowed	Allowed
REQUEST SENSE	Allowed	Allowed	Allowed
RESERVE(6) / RESERVE(10)[1]	Allowed	Allowed	Allowed
SECURITY PROTOCOL IN[1]	Allowed	Allowed	Allowed
SECURITY PROTOCOL OUT			
Tape Data Encryption[1]	Conflict	Conflict	Conflict
Authentication in Host Attachments of Transient Storage Devices[1]	Conflict	Conflict	Conflict
Device Server Password Security	Allowed	Allowed	Conflict
IEEE 1667[1]	Conflict	Conflict	Conflict
TCG[1]	Conflict	Conflict	Conflict
SEND DIAGNOSTIC	Allowed	Allowed	Allowed
SET IDENTIFYING INFORMATION[1]	Allowed	Allowed	Allowed

[1]ATA SECURITY CONFLICT shall not be returned for this command.
[2]Allowed unless otherwise specified.

Page: 160

Number: 1 Author: Kevin_Marks Subject: Highlight Date: 8/28/2008 10:23:24 AM -07'00'

various security modes
s/b
various ATA security modes

Status
moverby Accepted 11/3/2008 11:02:08 PM

Number: 2 Author: Kevin_Marks Subject: Highlight Date: 8/28/2008 10:26:10 AM -07'00'

These should not be shaded.

Status
moverby Accepted 11/3/2008 11:02:12 PM

Number: 3 Author: HPQ-RElliott Subject: Note Date: 9/3/2008 9:42:24 AM -07'00'

Rather than try to list each security protocol, combine into one row:
"All other security protocols"

Status
moverby Accepted 11/3/2008 11:02:15 PM

Table 122 — SPC commands allowed in the presence of various security modes (part 3 of 3)

Command	Locked	Unlocked or Disabled	Frozen
SET PRIORITY[1]	Allowed	Allowed	Allowed
SET TARGET PORT GROUPS[1]	Allowed	Allowed	Allowed
SET TIMESTAMP[1]	Allowed	Allowed	Allowed
TEST UNIT READY	Allowed	Allowed	Allowed
WRITE ATTRIBUTE[1]	Allowed	Allowed	Allowed
WRITE BUFFER	Allowed	Allowed	Allowed

[1]ATA SECURITY CONFLICT shall not be returned for this command.
[2]Allowed unless otherwise specified.

Table 123 shows the commands defined in SBC-3 and whether each command is allowed or conflicts depending on the security setting that is in effect for an ATA device. If a command in table 123 is not implemented by the SATL, then processing of the command is vendor specific.

Table 123 — SBC commands allowed in the presence of various security modes (part 1 of 2)

Command	Locked	Unlocked or Disabled	Frozen
FORMAT UNIT	Conflict	Allowed	Allowed
ORWRITE[1]	Conflict	Allowed	Allowed
PRE-FETCH (10) / (16)[1]	Conflict	Allowed	Allowed
PREVENT ALLOW MEDIUM REMOVAL (Prevent=0)[1]	Conflict	Allowed	Allowed
PREVENT ALLOW MEDIUM REMOVAL (Prevent<>0)[1]	Conflict	Allowed	Allowed
READ (6) / (10) / (12) / (16) / (32)	Conflict	Allowed	Allowed
READ CAPACITY (10) / (16)	Allowed	Allowed	Allowed
READ DEFECT DATA (10) / (12)[1]	Conflict	Allowed	Allowed
READ LONG (10) / (16)[1]	Conflict	Allowed	Allowed
REASSIGN BLOCKS	Conflict	Allowed	Allowed
START STOP UNIT ~~with START bit set to one and POWER CONDITION field set to 0h~~	Allowed	Allowed	Allowed
~~START STOP UNIT with START bit set to zero or POWER CONDITION field set to a value other than 0h[1]~~	~~Allowed~~	~~Allowed~~	~~Allowed~~
SYNCHRONIZE CACHE (10) / (16)	Conflict	Allowed	Allowed
VERIFY (10) / (12) / (16) / (32)	Conflict	Allowed	Allowed

[1]ATA SECURITY CONFLICT shall not be returned for this command.
[2]Allowed unless otherwise specified.

Page: 161

Number: 1 Author: Kevin_Marks Subject: Highlight Date: 8/28/2008 10:25:07 AM -07'00'

various security modes
s/b
various ATA security modes

Status
moverby Accepted 11/3/2008 11:03:39 PM

Number: 2 Author: Kevin_Marks Subject: Highlight Date: 8/28/2008 1:19:32 PM -07'00'

If a command in table 123 is not implemented by the SATL, then processing of the command is vendor specific.

s/b

What? If it is not supported, then SATL shall check condition the command with ILLEGAL REQUEST, and ASC = INVALID COMMAND OPERATION CODE.

Status
moverby Accepted 11/4/2008 1:03:12 PM

Author: moverby Subject: Sticky Note Date: 11/3/2008 11:03:49 PM

Agreed.

Number: 3 Author: Kevin_Marks Subject: Highlight Date: 8/28/2008 10:28:22 AM -07'00'

various security modes
s/b
various ATA security modes

Status
moverby Accepted 11/3/2008 11:03:52 PM

Number: 4 Author: Kevin_Marks Subject: Highlight Date: 8/28/2008 10:30:38 AM -07'00'

READ (32) is not defined in this standard, so it should be shaded

Status
moverby Accepted 11/3/2008 11:04:03 PM

Author: moverby Subject: Sticky Note Date: 11/3/2008 11:03:59 PM

Removing all shading.

Number: 5 Author: LSI-Penokie Subject: Sticky Note Date: 8/20/2008 3:40:09 PM -07'00'

Table 122 footnotes need to be a and b not 1 and 2.

Status
moverby Accepted 11/3/2008 11:04:07 PM

Number: 6 Author: Kevin_Marks Subject: Cross-Out Date: 8/28/2008 10:33:15 AM -07'00'

See no reason to split this out.

Status
moverby Accepted 11/3/2008 11:04:17 PM

Number: 7 Author: Kevin_Marks Subject: Cross-Out Date: 8/28/2008 10:32:55 AM -07'00'

Status
moverby Accepted 11/3/2008 11:04:21 PM

Number: 8 Author: Kevin_Marks Subject: Highlight Date: 8/28/2008 10:30:55 AM -07'00'

VERIFY (32) is not defined in this standard, so it should be shaded

Status
moverby Accepted 11/3/2008 11:04:29 PM

Author: moverby Subject: Sticky Note Date: 11/3/2008 11:04:27 PM

Removing all shading

Number: 9 Author: HPQ-RElliott Subject: Note Date: 9/3/2008 9:42:24 AM -07'00'

fix double line on page 161

Status
moverby Accepted 11/3/2008 11:04:41 PM

Table 123 — SBC commands allowed in the presence of various security modes (part 2 of 2)

Command	Locked	Unlocked or Disabled	Frozen
WRITE (6) / (10) / (12) / (16) / (32)	Conflict	Allowed	Allowed
WRITE AND VERIFY (10) / (12) / (16) / (32)	Conflict	Allowed	Allowed
WRITE LONG (10) / (16)[1]	Conflict	Allowed	Allowed
WRITE SAME (10) / (16) / (32)	Conflict	Allowed	Allowed
XDREAD (10) / (32)	Conflict	Allowed	Allowed
XDWRITE (10) / (32)	Conflict	Allowed	Allowed
XDWRITEREAD (10) / (32)	Conflict	Allowed	Allowed
XPWRITE (10) / (32)	Conflict	Allowed	Allowed

[1]ATA SECURITY CONFLICT shall not be returned for this command.
[2]Allowed unless otherwise specified.

12.5.1.2 SECURITY PROTOCOL OUT command

12.5.1.2.1 SECURITY PROTOCOL OUT command overview

The SECURITY PROTOCOL OUT command is used by an application client to send ATA Security feature set commands and data to the ATA device. See ATA8-ACS for a description of the ATA Security feature set and all of the functions defined therein.

When the SECURITY PROTOCOL field is set to EFh in a SECURITY PROTOCOL OUT command, the SECURITY PROTOCOL SPECIFIC field shall contain a single numeric value as described in table 124.

Table 124 — SECURITY PROTOCOL SPECIFIC field

SECURITY PROTOCOL SPECIFIC field	Description	ATA command processing reference[a]	Parameter data reference
0000h	Reserved		
0001h	Set password	SECURITY SET PASSWORD	12.5.1.2.2
0002h	Unlock	SECURITY UNLOCK	12.5.1.2.3
0003h	Erase prepare	SECURITY ERASE PREPARE	No data is transferred
0004h	Erase unit	SECURITY ERASE UNIT	12.5.1.2.4
0005h	Freeze lock	SECURITY FREEZE LOCK	No data is transferred
0006h	Disable password	SECURITY DISABLE PASSWORD	12.5.1.2.5
0007h - FFFFh	Reserved		

[a] See ATA8-ACS for a description of how this security protocol specific field value shall be processed.

~~The INC_512 bit shall be set to zero. If a SECURITY PROTOCOL OUT command is received with the INC_512 bit is set to one, then the SECURITY PROTOCOL OUT command shall be terminated with CHECK CONDITION status, with the sense key set to ILLEGAL REQUEST, and the additional sense code set to INVALID FIELD IN CDB.~~

Page: 162

Number: 1 Author: Kevin_Marks Subject: Highlight Date: 8/28/2008 10:28:30 AM -07'00'
various security modes
s/b
various ATA security modes

Status
moverby Accepted 11/3/2008 11:04:48 PM

Number: 2 Author: Kevin_Marks Subject: Highlight Date: 8/28/2008 10:31:07 AM -07'00'
WRITE (32) is not defined in this standard, so it should be shaded

Status
moverby Rejected 11/3/2008 11:05:00 PM
Author: moverby Subject: Sticky Note Date: 11/3/2008 11:04:56 PM
Removing all shading

Number: 3 Author: Kevin_Marks Subject: Highlight Date: 8/28/2008 10:31:23 AM -07'00'
WRITE AND VERIFY (32) is not defined in this standard, so it should be shaded

Status
moverby Rejected 11/3/2008 11:05:11 PM
Author: moverby Subject: Sticky Note Date: 11/3/2008 11:05:07 PM
Removing all shading

Number: 4 Author: Kevin_Marks Subject: Highlight Date: 8/28/2008 10:31:43 AM -07'00'
WRITE SAME (32) is not defined in this standard, so it should be shaded

Status
moverby Rejected 11/3/2008 11:05:36 PM
Author: moverby Subject: Sticky Note Date: 11/3/2008 11:05:29 PM
Removing shading

Number: 5 Author: HPQ-RElliott Subject: Highlight Date: 9/3/2008 9:42:24 AM -07'00'
Table footnotes in table 123 should be a b not 1 2

Status
moverby Accepted 11/3/2008 11:05:40 PM

Number: 6 Author: LSI-Penokie Subject: Highlight Date: 8/20/2008 4:00:20 PM -07'00'
This should be << defined in this standard >>..

Status
moverby Accepted 11/3/2008 11:05:47 PM

Number: 7 Author: Kevin_Marks Subject: Highlight Date: 8/28/2008 11:37:13 AM -07'00'
shall contain a single numeric value as described in table 124.

s/b

specifies the ATA command that the SATL shall send to the ATA device (see table 124.)

Status
moverby Accepted 11/3/2008 11:06:10 PM

Number: 8 Author: Kevin_Marks Subject: Highlight Date: 8/28/2008 11:39:29 AM -07'00'
SECURITY
s/b
ATA SECURITY

Status
moverby Accepted 11/3/2008 11:06:14 PM

Number: 9 Author: Kevin_Marks Subject: Highlight Date: 8/28/2008 11:39:34 AM -07'00'
SECURITY
s/b
ATA SECURITY

Status
moverby Accepted 11/3/2008 11:06:17 PM

Number: 10 Author: Kevin_Marks Subject: Highlight Date: 8/28/2008 11:39:43 AM -07'00'
SECURITY
s/b
ATA SECURITY

Status
moverby Accepted 11/3/2008 11:06:21 PM

Number: 11 Author: Kevin_Marks Subject: Highlight Date: 8/28/2008 11:39:50 AM -07'00'
SECURITY
s/b
ATA SECURITY

Status
moverby Accepted 11/3/2008 11:06:24 PM

Number: 12 Author: Kevin_Marks Subject: Highlight Date: 8/28/2008 11:39:58 AM -07'00'
SECURITY
s/b
ATA SECURITY

Status
moverby Accepted 11/3/2008 11:06:28 PM

Comments from page 162 continued on next page

Table 123 — SBC commands allowed in the presence of various security modes (part 2 of 2)

Command	Locked	Unlocked or Disabled	Frozen
WRITE (6) / (10) / (12) / (16) / (32)	Conflict	Allowed	Allowed
WRITE AND VERIFY (10) / (12) / (16) / (32)	Conflict	Allowed	Allowed
WRITE LONG (10) / (16)[1]	Conflict	Allowed	Allowed
WRITE SAME (10) / (16) / (32)	Conflict	Allowed	Allowed
XDREAD (10) / (32)	Conflict	Allowed	Allowed
XDWRITE (10) / (32)	Conflict	Allowed	Allowed
XDWRITEREAD (10) / (32)	Conflict	Allowed	Allowed
XPWRITE (10) / (32)	Conflict	Allowed	Allowed

[1]ATA SECURITY CONFLICT shall not be returned for this command.
[2]Allowed unless otherwise specified.

12.5.1.2 SECURITY PROTOCOL OUT command

12.5.1.2.1 SECURITY PROTOCOL OUT command overview

The SECURITY PROTOCOL OUT command is used by an application client to send ATA Security feature set commands and data to the ATA device. See ATA8-ACS for a description of the ATA Security feature set and all of the functions defined therein.

When the SECURITY PROTOCOL field is set to EFh in a SECURITY PROTOCOL OUT command, the SECURITY PROTOCOL SPECIFIC field shall contain a single numeric value as described in table 124.

Table 124 — SECURITY PROTOCOL SPECIFIC field

SECURITY PROTOCOL SPECIFIC field	Description	ATA command processing reference[a]	Parameter data reference
0000h	Reserved		
0001h	Set password	SECURITY SET PASSWORD	12.5.1.2.2
0002h	Unlock	SECURITY UNLOCK	12.5.1.2.3
0003h	Erase prepare	SECURITY ERASE PREPARE	No data is transferred
0004h	Erase unit	SECURITY ERASE UNIT	12.5.1.2.4
0005h	Freeze lock	SECURITY FREEZE LOCK	No data is transferred
0006h	Disable password	13 SECURITY DISABLE PASSWORD	12.5.1.2.5
0007h - FFFFh	Reserved		

14 See ATA8-ACS for a description of how this security protocol specific field value shall be processed.

15 ~~The INC_512 bit shall be set to zero. If a SECURITY PROTOCOL OUT command is received with the INC_512 bit is set to one, then the SECURITY PROTOCOL OUT command shall be terminated with CHECK CONDITION status, with the sense key set to ILLEGAL REQUEST, and the additional sense code set to INVALID FIELD IN CDB~~.

Number: 13 Author: Kevin_Marks Subject: Highlight Date: 8/28/2008 11:40:05 AM -07'00'

SECURITY
s/b
ATA SECURITY

Status
moverby Accepted 11/3/2008 11:06:32 PM

Number: 14 Author: Kevin_Marks Subject: Highlight Date: 8/28/2008 11:39:11 AM -07'00'

a See ATA8-ACS for a description of how this security protocol specific field value shall be processed.

This table note sounds strange, in that it sounds like the security protocol specific values are defined in ATA8-ACS.

I would remove the table note.

Status
moverby Accepted 11/3/2008 11:07:23 PM

Number: 15 Author: HPQ-RElliott Subject: Cross-Out Date: 9/3/2008 9:42:24 AM -07'00'

Delete:

The INC_512 bit shall be set to zero. If a SECURITY PROTOCOL OUT command is received with the INC_512 bit is set to one, then the SECURITY PROTOCOL OUT command shall be terminated with CHECK CONDITION status, with the sense key set to ILLEGAL REQUEST, and the additional sense code set to INVALID FIELD IN CDB

This is unnecessary. A SATL should be allowed to accept 512 byte chunks of data with padding. Ease of mapping into ATA was touted as the reason the INC_512 bit was proposed.

Status
moverby Rejected 11/4/2008 1:04:48 PM

Author: moverby Subject: Sticky Note Date: 11/3/2008 11:07:46 PM

Agreed.

Author: moverby Subject: Sticky Note Date: 11/4/2008 1:04:43 PM

After discussion in WG, it was decided that this was the desired behavior. Rejecting change.

All other CDB fields for the SECURITY PROTOCOL OUT command shall meet the requirements stated in SPC-4.

12.5.1.2.2 Set password parameter data

If the SECURITY PROTOCOL SPECIFIC field is set to 0001h in the SECURITY PROTOCOL OUT CDB, then the TRANSFER LENGTH field in the CDB shall be set to 24h. Table 125 defines the parameter data for the set password function.

Table 125 — Set password parameter data

Byte \ Bit	7	6	5	4	3	2	1	0
0	Reserved							MAXLVL
1	Reserved							MSTRPW
2	(MSB)	PASSWORD						
33								(LSB)
34	Reserved							
35								

If the maximum security level bit (MAXLVL) is set to zero, then the ATA device shall set the security level to high. If the MAXLVL bit is set to one, then the ATA device shall set the security level to maximum.

If the master password bit (MSTRPW) is set to zero, then the ATA device shall set the user password to the value in the PASSWORD field. If the MSTRPW bit is set to one, then the ATA device shall set the master password to the value in the PASSWORD field.

The PASSWORD field contains a 32-byte binary value.

12.5.1.2.3 Unlock parameter data

If the SECURITY PROTOCOL SPECIFIC field is set to 0002h in the SECURITY PROTOCOL OUT CDB, then the TRANSFER LENGTH field in the CDB shall be set to 24h. Table 126 defines the parameter data for the unlock function.

Table 126 — Unlock parameter data

Byte \ Bit	7	6	5	4	3	2	1	0
0	Reserved							
1	Reserved							MSTRPW
2	(MSB)	PASSWORD						
33								(LSB)
34	Reserved							
35								

If the master password bit (MSTRPW) is set to zero, then the ATA device shall compare the value in the PASSWORD field to the user password. If the MSTRPW bit is set to one, then the ATA device shall compare the value in the PASSWORD field to the master password.

The PASSWORD field contains a 32-byte binary value.

Page: 163

Number: 1 Author: Kevin_Marks Subject: Highlight Date: 8/28/2008 12:47:52 PM -07'00'

Table 125 defines the parameter data for the set password function.

s/b

Table 125 defines the parameter data for the SECURITY PROTOCOL OUT command when the SECURITY PROTOCOL SPECIFIC field is set to 0001h (set password).

Status
moverby Accepted 11/3/2008 11:08:08 PM

Number: 2 Author: HPQ-RElliott Subject: Highlight Date: 9/3/2008 9:42:24 AM -07'00'

shall be set to 24h

Weaken this rule to allow INC_512 to be used, and also to allow padding even if the extra bytes are not used. If ATA adds some more fields in that area, SATL should just pass them through.

Status
moverby Rejected 11/4/2008 1:05:55 PM

Author: moverby Subject: Sticky Note Date: 11/4/2008 1:05:42 PM

Rejecting as this is the expected and desired behavior.

Number: 3 Author: Kevin_Marks Subject: Highlight Date: 8/28/2008 11:46:41 AM -07'00'

Table 125 — Set password parameter data

s/b

Table 125 - SECURITY PROTOCOL SPECIFIC field = 0001h (Set password) parameter data

Status
moverby Accepted 11/3/2008 11:08:23 PM

Number: 4 Author: HPQ-RElliott Subject: Highlight Date: 9/3/2008 9:42:24 AM -07'00'

(global)

parameter data
s/b
parameter list

(data-out uses "parameter list", data-in uses "parameter data")

Status
moverby Accepted 11/3/2008 11:08:15 PM

Number: 5 Author: moverby Subject: Sticky Note Date: 11/4/2008 1:32:55 PM

These bytes should not be reserved. This should be the master password identifier.

Number: 6 Author: HPQ-RElliott Subject: Note Date: 9/3/2008 9:42:24 AM -07'00'

(global)

SAT-2 should not try to define the functionality of any of the bits in the parameter lists/parameter data. That functionality is defined by ATA8-ACS; if ACS adds more fields or modifies the definitions, there's no point in SAT trying to keep up. The SAT-2 standard cannot say "the ATA device shall" do anything - that's outside of its control. The SATL can hope that the ATA device will work as documented in ATA8-ACS, but that's about all.

If this were a command defined in SPC-4 or SBC-3 that native SCSI device servers could implement, then a functional definition would be appropriate (and SAT-2 would define how to translate each SCSI field to the corresponding ATA field).

For table 125, just define that the parameter list is passed along byte-by-byte to the ATA device as the SECURITY SET PASSWORD data content. Apply this same concept to the other definitions.

The SATL does need to snoop the current security mode to implement table 123. What it is expected to snoop to do that should be defined.

Status
moverby Accepted 11/4/2008 1:28:24 PM

Author: moverby Subject: Sticky Note Date: 11/4/2008 1:28:05 PM

Reject in part. Table 125 is appropriate for a SAT-specific implementation of this feature. Accepted that snooping is required. A note needs to be added to table 124 indicating that after processing any of the commands in that table, the SATL needs to update the current security state. Add text before table 122 explaining where the SATL can find the current security state.

Number: 7 Author: Kevin_Marks Subject: Highlight Date: 8/28/2008 12:28:37 PM -07'00'

If the maximum security level bit (MAXLVL) is set to zero, then the ATA device shall set the security level to high. If the MAXLVL bit is set to one, then the ATA device shall set the security level to maximum.

s/b

If the maximum security level bit (MAXLVL) is set to zero, then the shall set the ATA Master Password Capability bit (i.e., word 0 bit 8) of the ATA SECURITY SET PASSWORD data content to zero when transferring the data content to the ATA device for the ATA SECURITY SET PASSWORD command. If the maximum security level bit (MAXLVL) is set to one, then the shall set ATA Master Password Capability bit (i.e., word 0 bit 8) of the ATA SECURITY SET PASSWORD data content to one when transferring the data content to the ATA device for the ATA SECURITY SET PASSWORD command.

This could be shorted by saying copy the value.

Number: 8 Author: Kevin_Marks Subject: Highlight Date: 8/28/2008 12:29:29 PM -07'00'

If the master password bit (MSTRPW) is set to zero, then the ATA device shall set the user password to the value in the PASSWORD field. If the MSTRPW bit is set to one, then

Comments from page 163 continued on next page

All other CDB fields for the SECURITY PROTOCOL OUT command shall meet the requirements stated in SPC-4.

12.5.1.2.2 Set password parameter data

If the SECURITY PROTOCOL SPECIFIC field is set to 0001h in the SECURITY PROTOCOL OUT CDB, then the TRANSFER LENGTH field in the CDB shall be set to 24h. Table 125 defines the parameter data for the set password function.

Table 125 — Set password parameter data

Byte \ Bit	7	6	5	4	3	2	1	0
0	Reserved							MAXLVL
1	Reserved							MSTRPW
2	(MSB)	PASSWORD						
33								(LSB)
34	Reserved							
35								

If the maximum security level bit (MAXLVL) is set to zero, then the ATA device shall set the security level to high. If the MAXLVL bit is set to one, then the ATA device shall set the security level to maximum.

If the master password bit (MSTRPW) is set to zero, then the ATA device shall set the user password to the value in the PASSWORD field. If the MSTRPW bit is set to one, then the ATA device shall set the master password to the value in the PASSWORD field.

The PASSWORD field contains a 32-byte binary value.

12.5.1.2.3 Unlock parameter data

If the SECURITY PROTOCOL SPECIFIC field is set to 0002h in the SECURITY PROTOCOL OUT CDB, then the TRANSFER LENGTH field in the CDB shall be set to 24h. Table 126 defines the parameter data for the unlock function.

Table 126 — Unlock parameter data

Byte \ Bit	7	6	5	4	3	2	1	0
0	Reserved							
1	Reserved							MSTRPW
2	(MSB)	PASSWORD						
33								(LSB)
34	Reserved							
35								

If the master password bit (MSTRPW) is set to zero, then the ATA device shall compare the value in the PASSWORD field to the user password. If the MSTRPW bit is set to one, then the ATA device shall compare the value in the PASSWORD field to the master password.

The PASSWORD field contains a 32-byte binary value.

the ATA device shall set the master password to the value in the PASSWORD field.

s/b

If the master password bit (MSTRPW) is set to zero, then the shall set the ATA Identifier bit (i.e., word 0 bit 0) of the ATA SECURITY SET PASSWORD data content to zero when transferring the data content to the ATA device for the ATA SECURITY SET PASSWORD command. If the master password bit (MSTRPW) is set to one, then the shall set ATA Identifier bit (i.e., word 0 bit 0) of the ATA SECURITY SET PASSWORD data content to one when transferring the data content to the ATA device for the ATA SECURITY SET PASSWORD command.

This could be shorted by saying copy the value.

Author: moverby Subject: Sticky Note Date: 11/4/2008 1:37:37 PM
The SATL shall copy the value of the master password bit to the ATA identifier bit (word 0, bit 0) of the ATA SECURITY SET PASSWORD data content.

Replicate to other Kevin Marks comments.

Number: 9 Author: Kevin_Marks Subject: Highlight Date: 8/28/2008 12:28:31 PM -07'00'
The SATL shall set the The PASSWORD field contains a 32-byte binary value.

s/b

The SATL shall set the ATA Password field (i.e., words 1-16) of the ATA SECURITY SET PASSWORD data content to the contents of the PASSWORD field when transferring the data content to the ATA device for the ATA SECURITY SET PASSWORD command.

Does this need a byte swap?

Status
moverby Accepted 11/4/2008 1:29:51 PM
Author: moverby Subject: Sticky Note Date: 11/4/2008 1:29:28 PM
No byte swap needed. Other text accepted.

Number: 10 Author: HPQ-RElliott Subject: Highlight Date: 9/3/2008 9:42:24 AM -07'00'
(global)
"The PASSWORD field contains a 32-byte binary value."
and the (MSB) and (LSB) labels.

That's an awful large number. This means the SATL converts:
SCSI byte 2 (with the MSB) to ATA word 16 bits 15:8 (the MSB in little-endian)
SCSI byte 3 to ATA word 16 bits 7:0
SCSI byte 32 to ATA word 1 bits 15:8
SCSI byte 33 (with the LSB) to ATA word 1 bits 7:0 (the LSB in little-endian)

I suspect the intend was that the PASSWORD field to be passed along preserving the byte order.
SCSI byte 2 to ATA word 1 bits 7:0 (i.e. ATA byte 2)
SCSI byte 3 to ATA word 1 bits 15:8 (i.e., ATA byte 3)
...
SCSI byte 32 to ATA word 16 bits 7:0 (i.e. ATA byte 32)
SCSI byte 33 to ATA word 16 bits 15:8 (i.e. ATA byte 33)

The fix is to simply remove the (MSB) and (LSB) labels. A table showing the desired mapping is highly advisable as well.

Check the other PASSWORD fields as well.

Status
moverby Rejected 10/20/2008 5:44:39 PM -07'00'
Author: moverby Subject: Sticky Note Date: 10/20/2008 5:44:25 PM -07'00'
Discussed at WG meeting. Table 2 seems to cover this case.

Number: 11 Author: Kevin_Marks Subject: Highlight Date: 8/28/2008 12:47:41 PM -07'00'
Table 126 defines the parameter data for the unlock function.

s/b

Table 126 defines the parameter data for the SECURITY PROTOCOL OUT command when the SECURITY PROTOCOL SPECIFIC field is set to 0002h (unlock).

Status
moverby Accepted 11/3/2008 11:09:06 PM
Number: 12 Author: Kevin_Marks Subject: Highlight Date: 8/28/2008 11:47:20 AM -07'00'
Table 126 — Unlock parameter data

s/b

Table 126 - SECURITY PROTOCOL SPECIFIC field = 0002h (unlock) parameter data

Status
moverby Accepted 11/3/2008 11:09:10 PM
Number: 13 Author: Kevin_Marks Subject: Highlight Date: 8/28/2008 12:35:57 PM -07'00'
If the master password bit (MSTRPW) is set to zero, then the ATA device shall compare the value in the PASSWORD field to the user password. If the MSTRPW bit is set to one, then the ATA device shall compare the value in the PASSWORD field to the master password.

s/b

If the master password bit (MSTRPW) is set to zero, then the shall set the ATA Identifier bit (i.e., word 0 bit 0) of the ATA SECURITY UNLOCK data content to zero when transferring the data content to the ATA device for the ATA SECURITY UNLOCK command. If the master password bit (MSTRPW) is set to one, then the shall set ATA Identifier bit (i.e., word 0 bit 0) of the ATA SECURITY UNLOCK data content to one when transferring the data content to the ATA device for the ATA SECURITY UNLOCK command.

This could be shorted by saying copy the value.

Comments from page 163 continued on next page

All other CDB fields for the SECURITY PROTOCOL OUT command shall meet the requirements stated in SPC-4.

12.5.1.2.2 Set password parameter data

If the SECURITY PROTOCOL SPECIFIC field is set to 0001h in the SECURITY PROTOCOL OUT CDB, then the TRANSFER LENGTH field in the CDB shall be set to 24h. Table 125 defines the parameter data for the set password function.

Table 125 — Set password parameter data

Byte \ Bit	7	6	5	4	3	2	1	0
0	Reserved							MAXLVL
1	Reserved							MSTRPW
2	(MSB)	PASSWORD						
33								(LSB)
34	Reserved							
35								

If the maximum security level bit (MAXLVL) is set to zero, then the ATA device shall set the security level to high. If the MAXLVL bit is set to one, then the ATA device shall set the security level to maximum.

If the master password bit (MSTRPW) is set to zero, then the ATA device shall set the user password to the value in the PASSWORD field. If the MSTRPW bit is set to one, then the ATA device shall set the master password to the value in the PASSWORD field.

The PASSWORD field contains a 32-byte binary value.

12.5.1.2.3 Unlock parameter data

If the SECURITY PROTOCOL SPECIFIC field is set to 0002h in the SECURITY PROTOCOL OUT CDB, then the TRANSFER LENGTH field in the CDB shall be set to 24h. Table 126 defines the parameter data for the unlock function.

Table 126 — Unlock parameter data

Byte \ Bit	7	6	5	4	3	2	1	0
0	Reserved							
1	Reserved							MSTRPW
2	(MSB)	PASSWORD						
33								(LSB)
34	Reserved							
35								

If the master password bit (MSTRPW) is set to zero, then the ATA device shall compare the value in the PASSWORD field to the user password. If the MSTRPW bit is set to one, then the ATA device shall compare the value in the PASSWORD field to the master password.

14 The PASSWORD field contains a 32-byte binary value.

Status
moverby Accepted 11/3/2008 11:09:29 PM
Number: 14 Author: Kevin_Marks Subject: Highlight Date: 8/28/2008 12:32:19 PM -07'00'

The PASSWORD field contains a 32-byte binary value.

s/b

The SATL shall set the ATA Password field (i.e., words 1-16) of the ATA SECURITY UNLOCK data content to the contents of the PASSWORD field when transferring the data content to the ATA device for the ATA SECURITY UNLOCK command.

Does this need a byte swap?

12.5.1.2.4 Erase unit data

If the SECURITY PROTOCOL SPECIFIC field is set to 0004h in the SECURITY PROTOCOL OUT CDB, then the TRANSFER LENGTH field in the CDB shall be set to 24h. Table 127 defines the parameter data for the erase unit function.

Table 127 — Erase unit parameter data

Byte \ Bit	7	6	5	4	3	2	1	0
0	Reserved							EN_ER
1	Reserved							MSTRPW
2	(MSB)	PASSWORD						
33								(LSB)
34	Reserved							
35								

If the enhanced erase mode bit (EN_ER) is set to zero, then the ATA device shall be set to use the normal erase mode. If the EN_ER bit is set to one, then the ATA device shall be set to enhanced erase mode.

If the master password bit (MSTRPW) is set to zero, then the ATA device shall compare the value in the PASSWORD field to the user password. If the MSTRPW bit is set to one, then the ATA device shall compare the value in the PASSWORD field to the master password.

The PASSWORD field contains a 32-byte binary value.

12.5.1.2.5 Disable password parameter data

If the SECURITY PROTOCOL SPECIFIC field is set to 0006h in the SECURITY PROTOCOL OUT CDB, then the TRANSFER LENGTH field in the CDB shall be set to 24h. Table 128 defines the parameter data for the disable password function.

Table 128 — Disable password parameter data

Byte \ Bit	7	6	5	4	3	2	1	0
0	Reserved							
1	Reserved							MSTRPW
2	(MSB)	PASSWORD						
33								(LSB)
34	Reserved							
35								

If the master password bit (MSTRPW) is set to zero and the value in the PASSWORD field matches the user password, then the ATA device shall disable the user password. If the MSTRPW bit is set to one and the value in the PASSWORD field matches the master password, then the ATA device shall disable the master password.

The PASSWORD field contains a 32-byte binary value.

Page: 164

Number: 1 Author: Kevin_Marks Subject: Highlight Date: 8/28/2008 12:47:31 PM -07'00'

Table 127 defines the parameter data for the erase unit function.

s/b

Table 127 defines the parameter data for the SECURITY PROTOCOL OUT command when the SECURITY PROTOCOL SPECIFIC field is set to 0004h (erase unit).

Status
moverby Accepted 10/20/2008 1:15:12 PM -07'00'

Number: 2 Author: Kevin_Marks Subject: Highlight Date: 8/28/2008 12:47:18 PM -07'00'

Table 127 — Erase unit parameter data

s/b

Table 127 - SECURITY PROTOCOL SPECIFIC field = 0004h (erase unit) parameter data

Status
moverby Accepted 10/20/2008 1:15:16 PM -07'00'

Number: 3 Author: Kevin_Marks Subject: Highlight Date: 8/28/2008 12:41:16 PM -07'00'

If the enhanced erase mode bit (EN_ER) is set to zero, then the ATA device shall be set to use the normal erase mode. If the EN_ER bit is set to one, then the ATA device shall be set to enhanced erase mode.

s/b

If the enhanced erase mode bit (EN_ER) is set to zero, then the shall set the ATA Erase mode bit (i.e., word 0 bit 1) of the ATA SECURITY ERASE UNIT data content to zero when transferring the data content to the ATA device for the ATA SECURITY ERASE UNIT command. If the enhanced erase mode bit (EN_ER) is set to one, then the shall set ATA Erase mode bit (i.e., word 0 bit 1) of the ATA SECURITY ERASE UNIT data content to one when transferring the data content to the ATA device for the ATA SECURITY ERASE UNIT command.

This could be shorted by saying copy the value.

Number: 4 Author: Kevin_Marks Subject: Highlight Date: 8/28/2008 12:44:56 PM -07'00'

If the master password bit (MSTRPW) is set to zero, then the ATA device shall compare the value in the PASSWORD field to the user password. If the MSTRPW bit is set to one, then the ATA device shall compare the value in the PASSWORD field to the master password.

s/b

If the master password bit (MSTRPW) is set to zero, then the shall set the ATA Identifier bit (i.e., word 0 bit 0) of the ATA SECURITY ERASE UNIT data content to zero when transferring the data content to the ATA device for the ATA SECURITY ERASE UNIT command. If the master password bit (MSTRPW) is set to one, then the shall set ATA Identifer bit (i.e., word 0 bit 0) of the ATA SECURITY ERASE UNIT data content to one when transferring the data content to the ATA device for the ATA SECURITY ERASE UNIT command.

This could be shorted by saying copy the value.

Number: 5 Author: Kevin_Marks Subject: Highlight Date: 8/28/2008 12:43:17 PM -07'00'

The PASSWORD field contains a 32-byte binary value.

s/b

The SATL shall set the ATA Password field (i.e., words 1-16) of the ATA SECURITY ERASE UNIT data content to the contents of the PASSWORD field when transferring the data content to the ATA device for the ATA SECURITY ERASE UNIT command.

Does this need a byte swap?

Status
moverby Rejected 10/20/2008 5:45:27 PM -07'00'

Author: moverby Subject: Sticky Note Date: 10/20/2008 5:45:20 PM -07'00'

Rejected. Table 2 seems to handle this.

Number: 6 Author: Kevin_Marks Subject: Highlight Date: 8/28/2008 12:47:08 PM -07'00'

Table 128 defines the parameter data for the disable password function.

s/b

Table 128 defines the parameter data for the SECURITY PROTOCOL OUT command when the SECURITY PROTOCOL SPECIFIC field is set to 0006h (disable password).

Status
moverby Accepted 11/3/2008 11:09:59 PM

Number: 7 Author: Kevin_Marks Subject: Highlight Date: 8/28/2008 11:48:58 AM -07'00'

Table 128 — Disable password parameter data

s/b

Table 128 - SECURITY PROTOCOL SPECIFIC field = 0006h (disable password) parameter data

Status
moverby Accepted 11/3/2008 11:10:03 PM

Number: 8 Author: Kevin_Marks Subject: Highlight Date: 8/28/2008 12:46:10 PM -07'00'

If the master password bit (MSTRPW) is set to zero and the value in the PASSWORD field matches the user password, then the ATA device shall disable the user password. If the MSTRPW bit is set to one and the value in the PASSWORD field matches the master password, then the ATA device shall disable the master password.

Comments from page 164 continued on next page

12.5.1.2.4 Erase unit data

If the SECURITY PROTOCOL SPECIFIC field is set to 0004h in the SECURITY PROTOCOL OUT CDB, then the TRANSFER LENGTH field in the CDB shall be set to 24h. Table 127 defines the parameter data for the erase unit function.

Table 127 — Erase unit parameter data

Byte \ Bit	7	6	5	4	3	2	1	0
0	Reserved							EN_ER
1	Reserved							MSTRPW
2	(MSB)	PASSWORD						
33								(LSB)
34	Reserved							
35								

If the enhanced erase mode bit (EN_ER) is set to zero, then the ATA device shall be set to use the normal erase mode. If the EN_ER bit is set to one, then the ATA device shall be set to enhanced erase mode.

If the master password bit (MSTRPW) is set to zero, then the ATA device shall compare the value in the PASSWORD field to the user password. If the MSTRPW bit is set to one, then the ATA device shall compare the value in the PASSWORD field to the master password.

The PASSWORD field contains a 32-byte binary value.

12.5.1.2.5 Disable password parameter data

If the SECURITY PROTOCOL SPECIFIC field is set to 0006h in the SECURITY PROTOCOL OUT CDB, then the TRANSFER LENGTH field in the CDB shall be set to 24h. Table 128 defines the parameter data for the disable password function.

Table 128 — Disable password parameter data

Byte \ Bit	7	6	5	4	3	2	1	0
0	Reserved							
1	Reserved							MSTRPW
2	(MSB)	PASSWORD						
33								(LSB)
34	Reserved							
35								

If the master password bit (MSTRPW) is set to zero and the value in the PASSWORD field matches the user password, then the ATA device shall disable the user password. If the MSTRPW bit is set to one and the value in the PASSWORD field matches the master password, then the ATA device shall disable the master password.

The PASSWORD field contains a 32-byte binary value.

s/b

If the master password bit (MSTRPW) is set to zero, then the shall set the ATA Identifier bit (i.e., word 0 bit 0) of the ATA SECURITY DISABLE PASSWORD data content to zero when transferring the data content to the ATA device for the ATA SECURITY DISABLE PASSWORD command. If the master password bit (MSTRPW) is set to one, then the shall set ATA Identifer bit (i.e., word 0 bit 0) of the ATA SECURITY DISABLE PASSWORD data content to one when transferring the data content to the ATA device for the ATA SECURITY DISABLE PASSWORD command.

Status
moverby Accepted 11/3/2008 11:10:43 PM

Number: 9 Author: Kevin_Marks Subject: Highlight Date: 8/28/2008 12:44:42 PM -07'00'

The PASSWORD field contains a 32-byte binary value.

s/b

The SATL shall set the ATA Password field (i.e., words 1-16) of the ATA SECURITY DISABLE PASSWORD data content to the contents of the PASSWORD field when transferring the data content to the ATA device for the ATA SECURITY DISABLE PASSWORD command.

Does this need a byte swap?

Annex A
(normative)

SCSI to ATAPI Command Transmission

A.1 Introduction

This annex specifies the method of transmission of SCSI commands to an **ATAPI device**.

A.2 ATAPI Device Model

An ATAPI device operates by using an ATA command, the PACKET command, in order to transmit a SCSI CDB to the device. In addition to the SCSI command set supported by the device, the ATAPI device also supports a limited subset of the ATA command set to facilitate the identification and control of the device. The device supports its primary function through the SCSI command set that the device supports (e.g., read or write operations). A packet device may implement any command set reportable through the SCSI INQUIRY command peripheral device type field.

ATAPI devices may be identified through the issuance of the IDENTIFY DEVICE command. If the device is an ATAPI device, the device aborts the IDENTIFY DEVICE command and returns a specific signature in the ATA register set. The SATL can then obtain the correct identification information about the ATA specific configuration of the ATAPI device by issuing an IDENTIFY PACKET DEVICE command.

A.3 SCSI CDB Transmission

A SCSI CDB is transmitted by a SATL to an ATAPI device by the following sequence:

1) Issuing the PACKET command to the device;
2) Transmitting the SCSI CDB to the device (the command packet phase); and
3) Transmitting or receiving any data, if appropriate, necessary for the completion of the SCSI CDB

Some ATAPI devices do not permit the Byte Count Limit parameter of the PACKET command to be zero, even if the CDB requires no data transmission. This restriction, or the lack of such a restriction, is specified for each device in IDENTIFY PACKET DEVICE data, word 125 (see ATA8-ACS). If the device places a restriction, the SATL should place a value of 512 in the Byte Count Limit parameter of the PACKET command when transmitted if the CDB being processed requires no data transfer to or from the device.

Within the IDENTIFY PACKET DEVICE data returned by the device is a command size requirement for any SCSI CDB transmitted to the device through the packet command. This restriction is located in word 0 of the IDENTIFY PACKET DEVICE data, bits 1:0. This field specifies either a 12 byte or 16 byte CDB restriction. CDBs of a smaller size may be transmitted by the SATL to the device, however any additional bytes beyond the length of the CDB shall be transmitted as zero.

For example, if an ATAPI device reports that 12 byte command packets are required and the SATL sends an INQURY command to the device, the SATL would transmit the six bytes of the INQUIRY command, followed by six bytes set to zero.

If an application client sends a CDB to the SATL, where the size is greater than the maximum command packet size supported by the ATAPI device, then the SATL shall complete the command with error and a sense key of ILLEGAL REQUEST and an additional sense code of INVALID COMMAND OPERATION CODE.

During data transfers, ATAPI devices transmit or receive data on word boundaries. If a SATL transmits a data buffer whose length is not a multiple of a word, the SATL shall pad the transmitted data with an additional byte set to zero.

Page: 165

Number: 1 Author: HPQ-RElliott Subject: Highlight Date: 9/3/2008 9:42:24 AM -07'00'

Command Transmission
s/b
lowercase

Status
moverby Accepted 10/20/2008 1:09:34 PM -07'00'

Number: 2 Author: HPQ-RElliott Subject: Highlight Date: 9/3/2008 9:42:24 AM -07'00'

ATAPI device
should not be bold

Status
moverby Accepted 10/20/2008 1:09:46 PM -07'00'

Number: 3 Author: LSI-Penokie Subject: Highlight Date: 8/20/2008 4:06:48 PM -07'00'

This should not be bolded.

Status
moverby Accepted 10/20/2008 1:09:41 PM -07'00'

Number: 4 Author: HPQ-RElliott Subject: Highlight Date: 9/3/2008 9:42:24 AM -07'00'

Device Model
s/b
lowercase

Status
moverby Accepted 10/20/2008 1:09:51 PM -07'00'

Number: 5 Author: HPQ-RElliott Subject: Highlight Date: 9/3/2008 9:42:24 AM -07'00'

operates by using an ATA command, the PACKET command, in order to transmit a SCSI CDB to the device
s/b
accepts a SCSI CDB using the ATA PACKET command (see ATA8-ACS)

Status
moverby Rejected 10/20/2008 1:10:26 PM -07'00'

Author: moverby Subject: Sticky Note Date: 10/20/2008 1:10:22 PM -07'00'

Prefer Kevin's proposed rewording.

Number: 6 Author: Kevin_Marks Subject: Highlight Date: 8/28/2008 1:03:05 PM -07'00'

the ATA PACKET command

Status
moverby Accepted 10/20/2008 1:10:03 PM -07'00'

Number: 7 Author: HPQ-RElliott Subject: Highlight Date: 9/3/2008 9:42:24 AM -07'00'

A packet device
s/b
An ATAPI device

to match term defined in ata8-acs-r6

Status
moverby Accepted 10/20/2008 1:11:43 PM -07'00'

Number: 8 Author: Kevin_Marks Subject: Highlight Date: 8/28/2008 1:03:34 PM -07'00'

the
s/b
a

Status
moverby Accepted 10/20/2008 1:11:25 PM -07'00'

Number: 9 Author: HPQ-RElliott Subject: Highlight Date: 9/3/2008 9:42:24 AM -07'00'

(e.g., read or write operations)

move this earlier, after "primary function"

Status
moverby Accepted 10/20/2008 1:11:53 PM -07'00'

Number: 10 Author: Kevin_Marks Subject: Highlight Date: 8/28/2008 1:04:06 PM -07'00'

packet
s/b
ATAPI

Status
moverby Accepted 10/20/2008 1:11:12 PM -07'00'

Author: moverby Subject: Sticky Note Date: 10/20/2008 1:11:04 PM -07'00'

s/b an ATAPI

Number: 11 Author: LSI-Penokie Subject: Highlight Date: 8/20/2008 10:30:02 AM -07'00'

This should be << the INQUIRY command >>

Status
moverby Accepted 10/20/2008 1:12:18 PM -07'00'

Number: 12 Author: HPQ-RElliott Subject: Highlight Date: 9/3/2008 9:42:24 AM -07'00'

INQUIRY command
s/b
standard INQUIRY data

Status
moverby Accepted 10/20/2008 1:12:05 PM -07'00'

Comments from page 165 continued on next page

Annex A
(normative)

SCSI to ATAPI Command Transmission

A.1 Introduction

This annex specifies the method of transmission of SCSI commands to an **ATAPI device**.

A.2 ATAPI Device Model

An ATAPI device operates by using an ATA command, the PACKET command, in order to transmit a SCSI CDB to the device. In addition to the SCSI command set supported by the device, the ATAPI device also supports a limited subset of the ATA command set to facilitate the identification and control of the device. The device supports its primary function through the SCSI command set that the device supports (e.g., read or write operations). A packet device may implement any command set reportable through the SCSI INQUIRY command peripheral device type field.

ATAPI devices may be identified through the issuance of the IDENTIFY DEVICE command. If the device is an ATAPI device, the device aborts the IDENTIFY DEVICE command and returns a specific signature in the ATA register set. The SATL can then obtain the correct identification information about the ATA specific configuration of the ATAPI device by issuing an IDENTIFY PACKET DEVICE command.

A.3 SCSI CDB Transmission

A SCSI CDB is transmitted by a SATL to an ATAPI device by the following sequence:

1) Issuing the PACKET command to the device;
2) Transmitting the SCSI CDB to the device (the command packet phase); and
3) Transmitting or receiving any data, if appropriate, necessary for the completion of the SCSI CDB

Some ATAPI devices do not permit the Byte Count Limit parameter of the PACKET command to be zero, even if the CDB requires no data transmission. This restriction, or the lack of such a restriction, is specified for each device in IDENTIFY PACKET DEVICE data, word 125 (see ATA8-ACS). If the device places a restriction, the SATL should place a value of 512 in the Byte Count Limit parameter of the PACKET command when transmitted if the CDB being processed requires no data transfer to or from the device.

Within the IDENTIFY PACKET DEVICE data returned by the device is a command size requirement for any SCSI CDB transmitted to the device through the packet command. This restriction is located in word 0 of the IDENTIFY PACKET DEVICE data, bits 1:0. This field specifies either a 12 byte or 16 byte CDB restriction. CDBs of a smaller size may be transmitted by the SATL to the device, however any additional bytes beyond the length of the CDB shall be transmitted as zero.

For example, if an ATAPI device reports that 12 byte command packets are required and the SATL sends an INQURY command to the device, the SATL would transmit the six bytes of the INQUIRY command, followed by six bytes set to zero.

If an application client sends a CDB to the SATL, where the size is greater than the maximum command packet size supported by the ATAPI device, then the SATL shall complete the command with error and a sense key of ILLEGAL REQUEST and an additional sense code of INVALID COMMAND OPERATION CODE.

During data transfers, ATAPI devices transmit or receive data on word boundaries. If a SATL transmits a data buffer whose length is not a multiple of a word, the SATL shall pad the transmitted data with an additional byte set to zero.

Number: 13 Author: HPQ-RElliott Subject: Highlight Date: 9/3/2008 9:42:24 AM -07'00'

peripheral device type
s/b
smallcaps

Status
moverby Accepted 11/3/2008 11:10:54 PM

Number: 14 Author: HPQ-RElliott Subject: Highlight Date: 9/3/2008 9:42:24 AM -07'00'

ATAPI devices may be identified through the issuance of the IDENTIFY DEVICE command. If the device is an ATAPI device, the device aborts the IDENTIFY DEVICE command and returns a specific signature in the ATA register set. The SATL can then obtain the correct identification information about the ATA specific configuration of the ATAPI device by issuing an IDENTIFY PACKET DEVICE command.

Rewrite as:
To detect whether an attached device is an ATA device or an ATAPI device, the SATL may issue an IDENTIFY DEVICE command. If the device is an ATAPI device, the device aborts the IDENTIFY DEVICE command and returns a specific signature in the ATA
register set.

Status
moverby Accepted 10/20/2008 1:12:51 PM -07'00'

Number: 15 Author: Kevin_Marks Subject: Highlight Date: 8/28/2008 1:04:44 PM -07'00'

IDENTIFY
s/b
ATA IDENTIFY

Status
moverby Accepted 10/20/2008 1:12:47 PM -07'00'

Number: 16 Author: Kevin_Marks Subject: Highlight Date: 8/28/2008 1:04:55 PM -07'00'

IDENTIFY
s/b
ATA IDENTIFY

Status
moverby Accepted 10/20/2008 1:12:57 PM -07'00'

Number: 17 Author: Kevin_Marks Subject: Highlight Date: 8/28/2008 1:05:18 PM -07'00'

IDENTIFY
s/b
ATA IDENTIFY

Status
moverby Accepted 10/20/2008 1:13:00 PM -07'00'

Number: 18 Author: HPQ-RElliott Subject: Highlight Date: 9/3/2008 9:42:24 AM -07'00'

Transmission
s/b
lowercase

Status
moverby Accepted 10/20/2008 1:14:26 PM -07'00'

Number: 19 Author: LSI-Penokie Subject: Sticky Note Date: 8/20/2008 4:10:54 PM -07'00'

The first word in each item in this 1,2,3 list should not be capitalized.

Status
moverby Accepted 10/20/2008 1:13:15 PM -07'00'

Number: 20 Author: HPQ-RElliott Subject: Highlight Date: 9/3/2008 9:42:24 AM -07'00'

CDB

add .

Status
moverby Accepted 10/20/2008 1:13:48 PM -07'00'

Number: 21 Author: Kevin_Marks Subject: Highlight Date: 8/28/2008 1:06:15 PM -07'00'

PACKET
s/b
ATA PACKET

Status
moverby Accepted 10/20/2008 1:13:58 PM -07'00'

Number: 22 Author: Kevin_Marks Subject: Cross-Out Date: 8/28/2008 1:06:40 PM -07'00'

Status
moverby Accepted 10/20/2008 1:14:12 PM -07'00'

Number: 23 Author: Kevin_Marks Subject: Highlight Date: 8/28/2008 1:06:31 PM -07'00'

IDENTIFY
s/b
ATA IDENTIFY

Status
moverby Accepted 10/20/2008 1:14:16 PM -07'00'

Number: 24 Author: Kevin_Marks Subject: Highlight Date: 8/28/2008 1:07:06 PM -07'00'

PACKET
s/b
ATA PACKET

Status
moverby Accepted 11/3/2008 11:10:58 PM

Number: 25 Author: Kevin_Marks Subject: Highlight Date: 8/28/2008 1:07:16 PM -07'00'

IDENTIFY
s/b
ATA IDENTIFY

Comments from page 165 continued on next page

Annex A
(normative)

SCSI to ATAPI Command Transmission

A.1 Introduction

This annex specifies the method of transmission of SCSI commands to an **ATAPI device**.

A.2 ATAPI Device Model

An ATAPI device operates by using an ATA command, the PACKET command, in order to transmit a SCSI CDB to the device. In addition to the SCSI command set supported by the device, the ATAPI device also supports a limited subset of the ATA command set to facilitate the identification and control of the device. The device supports its primary function through the SCSI command set that the device supports (e.g., read or write operations). A packet device may implement any command set reportable through the SCSI INQUIRY command peripheral device type field.

ATAPI devices may be identified through the issuance of the IDENTIFY DEVICE command. If the device is an ATAPI device, the device aborts the IDENTIFY DEVICE command and returns a specific signature in the ATA register set. The SATL can then obtain the correct identification information about the ATA specific configuration of the ATAPI device by issuing an IDENTIFY PACKET DEVICE command.

A.3 SCSI CDB Transmission

A SCSI CDB is transmitted by a SATL to an ATAPI device by the following sequence:

1) Issuing the PACKET command to the device;
2) Transmitting the SCSI CDB to the device (the command packet phase); and
3) Transmitting or receiving any data, if appropriate, necessary for the completion of the SCSI CDB

Some ATAPI devices do not permit the Byte Count Limit parameter of the PACKET command to be zero, even if the CDB requires no data transmission. This restriction, or the lack of such a restriction, is specified for each device in IDENTIFY PACKET DEVICE data~~,~~ word 125 (see ATA8-ACS). If the device places a restriction, the SATL should place a value of 512 in the Byte Count Limit parameter of the PACKET command when transmitted if the CDB being processed requires no data transfer to or from the device.

Within the IDENTIFY PACKET DEVICE data returned by the device is a command size requirement for any SCSI CDB transmitted to the device through the packet command. This restriction is located in word 0 of the IDENTIFY PACKET DEVICE data, bits 1:0. This field specifies either a 12 byte or 16 byte CDB restriction. CDBs of a smaller size may be transmitted by the SATL to the device, however any additional bytes beyond the length of the CDB shall be transmitted as zero.

For example, if an ATAPI device reports that 12 byte command packets are required and the SATL sends an INQURY command to the device, the SATL would transmit the six bytes of the INQUIRY command, followed by six bytes set to zero.

If an application client sends a CDB to the SATL, where the size is greater than the maximum command packet size supported by the ATAPI device, then the SATL shall complete the command with error and a sense key of ILLEGAL REQUEST and an additional sense code of INVALID COMMAND OPERATION CODE.

During data transfers, ATAPI devices transmit or receive data on word boundaries. If a SATL transmits a data buffer whose length is not a multiple of a word, the SATL shall pad the transmitted data with an additional byte set to zero.

Status
moverby Accepted 11/3/2008 11:11:02 PM

Number: 26 Author: Kevin_Marks Subject: Highlight Date: 8/28/2008 1:07:22 PM -07'00'

IDENTIFY
s/b
ATA IDENTIFY

Status
moverby Accepted 11/3/2008 11:11:05 PM

Number: 27 Author: HPQ-RElliott Subject: Highlight Date: 9/3/2008 9:42:24 AM -07'00'

INQURY
s/b
INQUIRY

Status
moverby Accepted 11/3/2008 11:11:11 PM

Number: 28 Author: HPQ-RElliott Subject: Highlight Date: 9/3/2008 9:42:24 AM -07'00'

error
s/b
CHECK CONDITION status

Status
moverby Accepted 10/20/2008 1:14:42 PM -07'00'

During data reception, the SATL shall allocate its receive buffers to accommodate an additional byte if the data length is not a multiple of a word.

In addition to the word alignment requirements, ATAPI devices may have additional requirements imposed on them for padding based on the underlying transport (e.g., SATA ATAPI devices are required to transmit all data aligned to a 32-bit dword. Therefore, a SATL in that environment allocates sufficient receive or transmit buffers to transmit or receive data that has been padded with zeros to a dword boundary).

If the ATAPI device completes a packet command with an error, the SATL shall send a ~~SCSI~~ REQUEST SENSE command to the device through the command transmission mechanism described in this subclause to obtain sense data before completing the CDB to the application client as ATAPI devices do not support any form of autosense. In addition SATL error handling does not use the error translation specified ~~elsewhere~~ in this standard.

ATAPI devices do not support any form of queued command transmission and SATL implementations shall either maintain an internal queue of received commands for the device or return TASK SET FULL status to the application client if there is already a PACKET command sequence in process or pending for the ATAPI device.

A.4 ATAPI Command Management

The ATAPI protocol does not have a mechanism for transmission of task management functions to an ATAPI device. Translation of task management functions by a SATL is unspecified.

A.5 SATL ATAPI Implementations

If a SATL supports attachment of ATAPI devices, the SATL shall not use the translations described elsewhere in this standard for the generation of INQUIRY data and instead shall return the INQUIRY data directly from the ATAPI device. In addition, the SATL shall transmit all SCSI CDBs that are permissible within the command packet data length restrictions (see A.3).

A.6 ATAPI Logical Unit Numbers

In order to comply with ATA8-ACS, ATAPI devices only support a single logical unit. ATAPI devices often do not implement the REPORT LUNS command. A SATL may need to implement the REPORT LUNS command to ensure compatibility of the ATAPI device with application clients.

Page: 166

Number: 1 Author: Kevin_Marks Subject: Cross-Out Date: 8/28/2008 1:10:59 PM -07'00'

Status
moverby Accepted 11/3/2008 11:11:20 PM

Number: 2 Author: LSI-Penokie Subject: Highlight Date: 8/20/2008 10:29:27 AM -07'00'

This should be << REQUEST SENSE >>

Status
moverby Accepted 11/3/2008 11:11:26 PM

Number: 3 Author: HPQ-RElliott Subject: Cross-Out Date: 9/3/2008 9:42:24 AM -07'00'

Delete

elsewhere

Status
moverby Rejected 10/29/2008 4:27:59 PM -07'00'
Author: moverby Subject: Sticky Note Date: 10/29/2008 4:27:55 PM -07'00'
Rejected in favor of George Penokie suggested rewrite of this phrase.

Number: 4 Author: LSI-Penokie Subject: Highlight Date: 8/20/2008 4:14:37 PM -07'00'

This should be << translation specified in this standard >>

Status
moverby Accepted 10/29/2008 4:27:29 PM -07'00'

Number: 5 Author: Kevin_Marks Subject: Highlight Date: 8/28/2008 1:11:48 PM -07'00'

PACKET
s/b
ATA PACKET

Status
moverby Accepted 10/29/2008 4:28:06 PM -07'00'

Number: 6 Author: HPQ-RElliott Subject: Highlight Date: 9/3/2008 9:42:24 AM -07'00'

Command Management
s/b
lowercase

Status
moverby Accepted 10/29/2008 4:28:23 PM -07'00'

Number: 7 Author: HPQ-RElliott Subject: Highlight Date: 9/3/2008 9:42:24 AM -07'00'

ATAPI protocol
s/b
PACKET Command Protocol

Status
moverby Accepted 10/29/2008 4:28:36 PM -07'00'

Number: 8 Author: HPQ-RElliott Subject: Highlight Date: 9/3/2008 9:42:24 AM -07'00'

Implementations
s/b
lowercase

Status
moverby Accepted 10/29/2008 4:28:43 PM -07'00'

Number: 9 Author: HPQ-RElliott Subject: Note Date: 9/3/2008 9:42:24 AM -07'00'

This is incorrect.

A SATL shall intercept INQUIRY commands requesting the ATA Information VPD page 89h and return the data for that page directly. If it does so, it must also intercept the Supported VPD pages VPD page 00h and add page 83h to the list.

Status
moverby Accepted 9/9/2008 4:28:37 PM -07'00'
Author: moverby Subject: Sticky Note Date: 9/9/2008 4:28:35 PM -07'00'
Add a "may" statement indicating that the SATL may intercept the INQUIRY command request for VPD pages 00 and 83h.

Status
moverby None 9/9/2008 4:28:34 PM -07'00'

Number: 10 Author: HPQ-RElliott Subject: Highlight Date: 9/3/2008 9:42:24 AM -07'00'

Logical Unit Numbers
s/b
lowercase

Status
moverby Accepted 10/29/2008 4:28:47 PM -07'00'

Number: 11 Author: HPQ-RElliott Subject: Highlight Date: 9/3/2008 9:42:24 AM -07'00'

command
s/b
command as required by SPC-4.

(provide a little more info)

Status
moverby Accepted 10/29/2008 4:29:10 PM -07'00'

Number: 12 Author: HPQ-RElliott Subject: Note Date: 9/3/2008 9:42:24 AM -07'00'

I suggest deleting A.6. How is a SATL supposed to know that it needs to do this? Only a SATL that only supports a specific ATAPI device could do so; generic SATLs might make things worse by trying to implement REPORT LUNS if the ATAPI device does indeed implement it.

Status

Comments from page 166 continued on next page

During data reception, the SATL shall allocate its receive buffers to accommodate an additional byte if the data length is not a multiple of a word.

In addition to the word alignment requirements, ATAPI devices may have additional requirements imposed on them for padding based on the underlying transport (e.g., SATA ATAPI devices are required to transmit all data aligned to a 32-bit dword. Therefore, a SATL in that environment allocates sufficient receive or transmit buffers to transmit or receive data that has been padded with zeros to a dword boundary).

If the ATAPI device completes a packet command with an error, the SATL shall send a ~~SCSI~~ REQUEST SENSE command to the device through the command transmission mechanism described in this subclause to obtain sense data before completing the CDB to the application client as ATAPI devices do not support any form of autosense. In addition SATL error handling does not use the error translation specified ~~elsewhere~~ in this standard.

ATAPI devices do not support any form of queued command transmission and SATL implementations shall either maintain an internal queue of received commands for the device or return TASK SET FULL status to the application client if there is already a PACKET command sequence in process or pending for the ATAPI device.

A.4 ATAPI Command Management

The ATAPI protocol does not have a mechanism for transmission of task management functions to an ATAPI device. Translation of task management functions by a SATL is unspecified.

A.5 SATL ATAPI Implementations

If a SATL supports attachment of ATAPI devices, the SATL shall not use the translations described elsewhere in this standard for the generation of INQUIRY data and instead shall return the INQUIRY data directly from the ATAPI device. In addition, the SATL shall transmit all SCSI CDBs that are permissible within the command packet data length restrictions (see A.3).

A.6 ATAPI Logical Unit Numbers

In order to comply with ATA8-ACS, ATAPI devices only support a single logical unit. ATAPI devices often do not implement the REPORT LUNS command. A SATL may need to implement the REPORT LUNS command to ensure compatibility of the ATAPI device with application clients.

moverby Accepted 11/4/2008 2:07:00 PM

Author: moverby Subject: Sticky Note Date: 11/3/2008 11:11:37 PM

Suggest deleting.